HP Color LaserJet CM2320 MFP Series
Service Manual

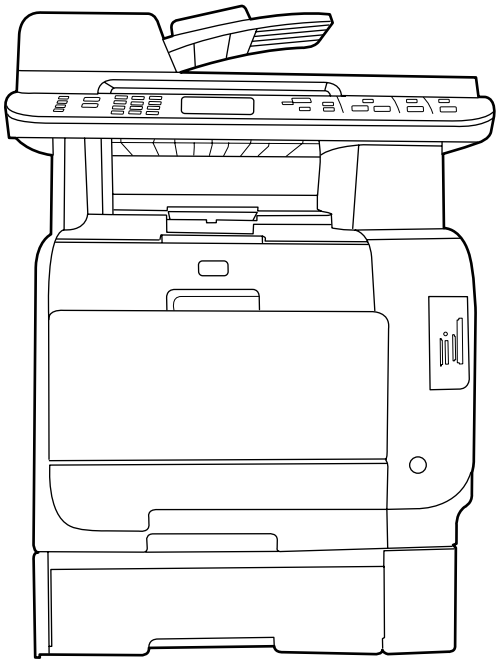

invent

HP Color LaserJet CM2320 MFP Series
Service Manual

Edition 1, 9/2008

Part number: CC434-90969

Table of contents

6 Removal and replacement

7 Problem solve

1 Product basics

Quick access to product information

Use the following Web site to find information about the product.

- www.hp.com/support/CM2320series

Table 1-1 Product guides

Guide	Description
HP Color LaserJet CM2320 MFP Series Getting Started Guide	Provides step-by-step instructions for installing and setting up the product.
HP Color LaserJet CM2320 MFP Series User Guide	Provides detailed information for using the product and problem-solving. Available on the product CD or in the Windows **Program Group** if the software is installed on a computer.
HP ToolboxFX	To check the product status and settings, and to view problem-solving information and online documentation, use the HP ToolboxFX. You must have performed a complete software installation in order to use the HP ToolboxFX. See the user guide for more information about software installation.
Online Help	Provides information about options that are available in the printer drivers. To view a Help file, open the online Help through the printer driver.

Product comparison

The product is available in the following configurations.

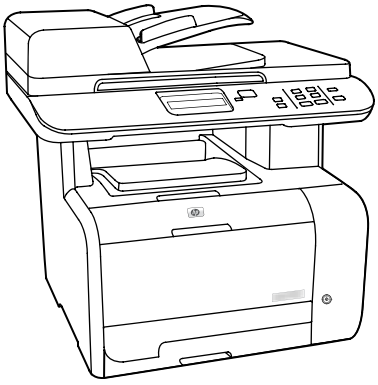		
HP Color LaserJet CM2320 MFP	**HP Color LaserJet CM2320 MFP Fax Model**	**HP Color LaserJet CM2320 MFP Memory-Card Model**
• Prints letter-size pages at speeds up to 21 pages per minute (ppm) and A4-size pages at speeds up to 19 ppm. • PCL 6 printer drivers. • Tray 1 holds up to 50 sheets of print media or up to 10 envelopes. • Tray 2 holds up to 250 sheets of print media. • Optional 250-sheet input tray (Tray 3) available. • Hi-Speed USB 2.0 port and 10/100 Base-T network port. • 160-MB random-access memory (RAM). • Flatbed scanner and 50-page automatic document feeder (ADF). • One available DIMM slot for memory expansion (accepts 64 MB and 128 MB DIMMS).	HP Color LaserJet CM2320 MFP, plus: • V.34 fax modem and 8-megabyte (MB) flash fax-storage memory. • Two RJ-11 fax phone line ports • Color graphics display	HP Color LaserJet CM2320 MFP Fax Model, plus: • Automatic two-sided (duplex) printing, fax receiving, and copying. • Four memory card slots • Additional 250-sheet input tray (Tray 3) included.

Product features

Performance	• Prints up to 21 ppm (letter) or 19 ppm (A4).
Print quality	• 1,200 dots per inch (dpi) with Image REt 2400 text and graphics. • Adjustable settings to optimize print quality. • The HP UltraPrecise print cartridge has a finer toner formulation that provides sharper text and graphics.
Fax (HP LaserJet CM2320 Fax Model / CM2320 Memory-Card Model only)	• Full-functionality fax capabilities with a V.34 fax; includes a phone book, fax/tel, and delayed-fax features.
Copy	• Includes ADF that allows faster, more efficient copy jobs with multiple-page documents.
Scan	• The product provides 1,200 pixels per inch (ppi), 24-bit full-color scanning from letter/A4-size scanner glass. • The product provides 300 ppi, 24-bit full-color scanning from the automatic document feeder (ADF). • Includes an ADF that allows faster, more efficient scan jobs with multiple-page documents.
Memory card slots (HP Color LaserJet CM2320 MFP Memory-Card Model only)	Supports a variety of memory cards. See the user guide for more information.

Networking	• TCP/IP
	  ◦ IPv4
	  ◦ IPv6

Printer driver features	• Fast printing performance, built-in Intellifont and TrueType scaling technologies, and advanced imaging capabilities are benefits of the PCL 6 printer language.
Interface connections	• Hi-Speed USB 2.0 port. • 10/100 Base-T ethernet network port (RJ-45). • RJ-11 fax/phone cable ports (HP LaserJet CM2320 Fax Model / CM2320 Memory-Card Model only).
Economical printing	• N-up printing (printing more than one page on a sheet). • Two-sided printing using the automatic duplexer.
Supplies	• A supplies status page that displays the amount of life remaining in the print cartridge. • No-shake cartridge design. • Authentication for HP print cartridges. • Enabled supplies-ordering capability.
Accessibility	• Online user guide that is compatible with text screen-readers. • Print cartridges can be installed and removed by using one hand. • All doors and covers can be opened by using one hand.

Product walkaround

Front view

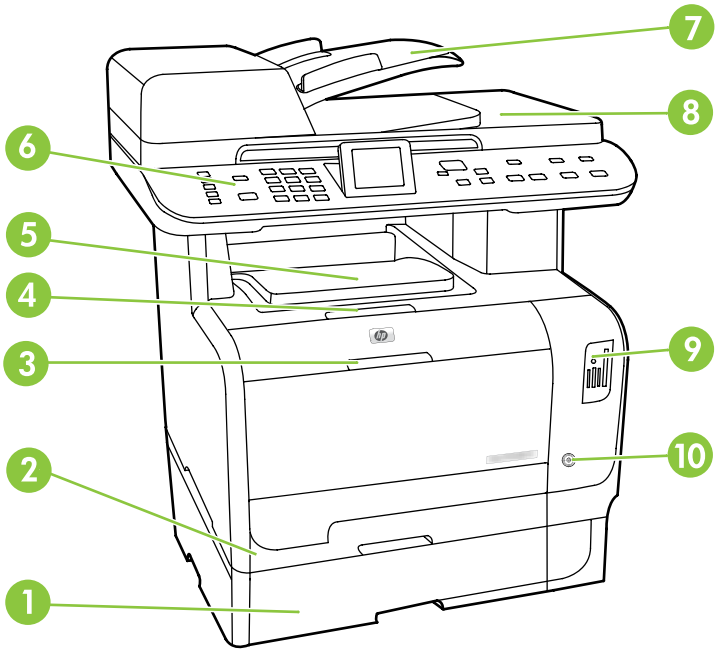

1	Optional Tray 3 (standard on the HP Color LaserJet CM2320 MFP Memory-Card Model)
2	Tray 2
3	Tray 1
4	Print-cartridge door latch
5	Top (face-down) output bin
6	Control panel
7	Automatic document feeder (ADF) input tray
8	Automatic document feeder (ADF) output bin
9	Memory card slots (HP Color LaserJet CM2320 MFP Memory-Card Model only)
10	Power switch

Back view

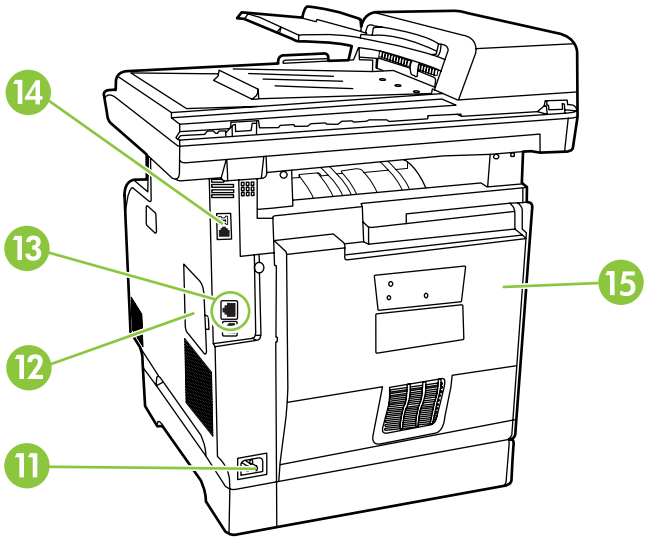

11	Power connector
12	DIMM door (for adding additional memory)
13	Hi-Speed USB 2.0 port and network port.
14	Fax ports (HP LaserJet CM2320 Fax Model / CM2320 Memory-Card Model only)
15	Rear door for jam access

Interface ports

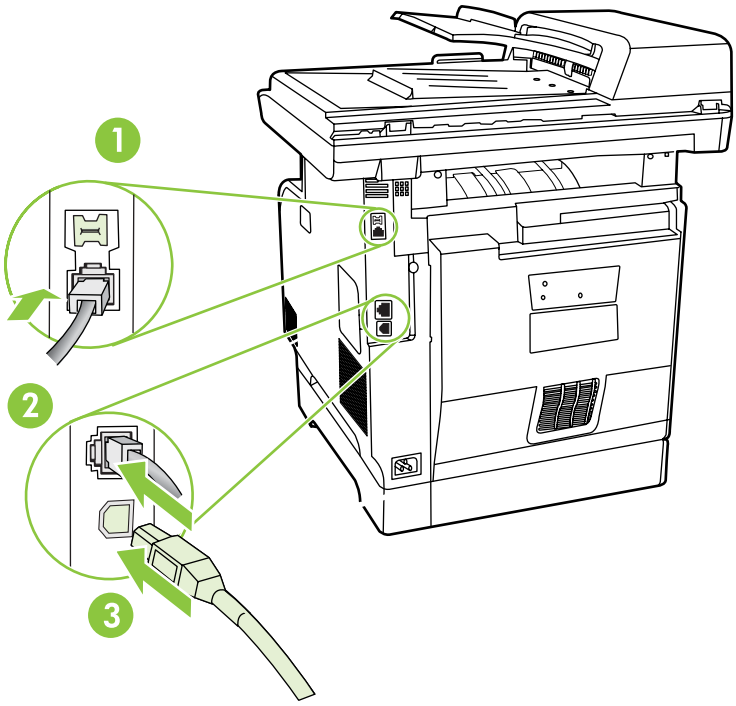

1	Fax ports (HP LaserJet CM2320 Fax Model / CM2320 Memory-Card Model only)
2	Network port
3	Hi-Speed USB 2.0 port

Supported operating systems

Supported operating systems for Windows

The product supports the following Windows operating systems:

Full software installation

- Windows XP (32-bit)
- Windows Vista (32-bit and 64-bit)

Print and scan driver

- Windows XP (64 bit)
- Windows 2000
- Windows 2003 Server (32-bit and 64-bit)

NOTE: The PCL 5 UPD and HP postscript level 3 emulation drivers are available only on the HP support website: www.hp.com/support/CM2320series.

Supported operating systems for Macintosh

The device supports the following Macintosh operating systems:

- Mac OS X v10.3, v10.4, and later

NOTE: For Mac OS X v10.4 and later, PPC and Intel Core Processor Macs are supported.

Supported product software

Software included with the product

Software for Windows

Embedded Web server

The device is equipped with an embedded Web server, which provides access to information about device and network activities. This information appears in a Web browser, such as Microsoft Internet Explorer, Netscape Navigator, Apple Safari, or Firefox.

The embedded Web server resides on the device. It is not loaded on a network server.

The embedded Web server provides an interface to the device that anyone who has a network-connected computer and a standard Web browser can use. No special software is installed or configured, but you must have a supported Web browser on your computer. To gain access to the embedded Web server, type the IP address for the device in the address line of the browser. (To find the IP address, print a configuration page. For more information about printing a configuration page, see Information pages on page 50.)

For a complete explanation of the features and functionality of the embedded Web server, see Embedded Web server on page 62.

HP ToolboxFX

HP ToolboxFX software is a program that you can use for the following tasks:

- Check the product status
- Check the supplies status and use HP SureSupply to shop online for supplies
- Set up alerts
- View product usage reports
- View product documentation
- Gain access to troubleshooting and maintenance tools
- Use HP Proactive Support to routinely scan your printing system and to prevent potential problems. HP Proactive Support can update software, firmware, and HP printer drivers.

You can view HP ToolboxFX software when the product is directly connected to your computer or when it is connected to a network.

Supported operating systems	• Microsoft Windows XP, Service Pack 2 (Home and Professional editions) • Microsoft Windows Vista™
Supported browsers	• Microsoft Internet Explorer 6.0 or 7.0

To download HP ToolboxFX software , go to www.hp.com/go/easyprintercare. This Web site also provides updated information about supported browsers and a list of HP products that support HP ToolboxFX software.

For more information about using HP ToolboxFX software, see View the HP ToolboxFX on page 52.

Software for Macintosh

Embedded Web server

The product is equipped with an embedded Web server, which provides access to information about product and network activities. This information appears in a Web browser, such as Netscape Navigator, Apple Safari, or Firefox.

The embedded Web server resides on the product. It is available on network and direct-connected devices.

The embedded Web server provides an interface to the product that anyone who has a standard Web browser can use. No special software is installed or configured, but you must have a supported Web browser on your computer. To gain access to the embedded Web server, click **Maintain Device** in HP Director.

For a complete explanation of the features and functionality of the embedded Web server, see Embedded Web server on page 62.

Supported printer drivers

Supported printer drivers for Windows

- PCL 5 UPD
- PCL 6
- HP postscript level 3 UPD

The printer drivers include online Help that has instructions for common printing tasks and also describes the buttons, checkboxes, and drop-down lists that are in the printer driver.

NOTE: The versions of PCL 5 and HP postscript level 3 emulation that are used in this product are identical to the PCL 5 and HP postscript level 3 emulation that are used in the HP Universal Print Driver (UPD) for Windows. It installs and operates in the same manner as previous versions of PCL 5 and HP postscript level 3 emulation, and it does not require any special configuration.

For more information about the UPD, see www.hp.com/go/upd.

HP Universal Print Driver (UPD)

The HP Universal Print Driver (UPD) for Windows is a single driver that gives you instant access to virtually any HP LaserJet product, from any location, without downloading separate drivers. It is built on proven HP print driver technology and has been tested thoroughly and used with many software programs. It is a powerful solution that performs consistently over time.

The HP UPD communicates directly with each HP product, gathers configuration information, and then customizes the user interface to show the product's unique, available features. It automatically enables features that are available for the product, such as two-sided printing and stapling, so you do not need to enable them manually.

For more information, go to www.hp.com/go/upd.

UPD installation modes

Traditional mode	• Use this mode if you are installing the driver from a CD for a single computer. • When installed with this mode, UPD operates like traditional printer drivers. • If you use this mode, you must install UPD separately for each computer.
Dynamic mode	• Use this mode if you are installing the driver for a mobile computer, so you can discover and print to HP products in any location. • Use this mode if you are installing UPD for a workgroup. • To use this mode, download UPD from the Internet. See www.hp.com/go/upd.

Supported printer drivers for Macintosh

The HP installer provides PostScript® Printer Description (PPD) files, Printer Dialog Extensions (PDEs), and the HP Printer Utility for use with Macintosh computers.

The PPDs, in combination with the Apple PostScript printer drivers, provide access to device features. Use the Apple PostScript printer driver that comes with the computer.

Software for other operating systems

OS	Software
UNIX	For HP-UX and Solaris networks, go to www.hp.com/go/LJCM2320_software to download the HP Jetdirect printer installer for UNIX.
Linux	For information, go to www.hp.com/go/linuxprinting.

System requirements

The product has the following minimum software and hardware requirements.

Windows XP

- Pentium II processor (Pentium III or higher recommended)
- 128 MB RAM
- 250 MB available hard disk space
- SVGA 800 x 600 monitor with 16-bit color
- Internet Explorer 6.0 or higher (full installation)
- USB port
- CD-ROM drive

Windows Vista

- 1 GHz processor
- 512 MB RAM
- 250 MB available hard disk space
- SVGA 800 x 600 monitor with 16-bit color
- Internet Explorer 6.0 or higher (full installation)
- USB port
- CD-ROM drive

Windows 2000 and Windows Server 2003

- Pentium II processor or greater
- 64 MB RAM
- 50 MB available hard disk space
- SVGA 800 x 600 monitor with 16-bit color (print driver, scan driver only)
- USB port
- CD-ROM drive

Mac OS X v10.3 and later

- PowerPC G3, G4, or G5 processor, or Intel Core processor
- 80 MB RAM
- 30 MB available hard disk space
- USB port
- CD-ROM drive
- Safari or Firefox browser

Connectivity

Supported network protocols

The product supports the TCP/IP network protocol. It is the most widely used and accepted networking protocol. Many networking services utilize this protocol. This product also supports IPv4 and IPv6. The following tables list the networking services/protocols that are supported on the product.

Table 1-2 Printing

Service name	Description
port9100 (Direct Mode)	Printing service
Line printer daemon (LPD)	Printing service

Table 1-3 Network product discovery

Service name	Description
SLP (Service Location Protocol)	Device Discovery Protocol, used to help find and configure network devices. Used primarily by Microsoft-based software programs.
mDNS (multicast Domain Name Service - also known as “Rendezvous” or “Bonjour”)	Device Discovery Protocol, used to help find and configure network devices. Used primarily by Apple Macintosh-based software programs.
ws-discover	Used by Microsoft-based software programs
LLMNR	Used when DNS services are not available

Table 1-4 Messaging and management

Service name	Description
HTTP (hypertext transfer protocol)	Allows Web browsers to communicate with embedded Web server.
EWS (embedded Web server)	Allows a user to manage the product through a Web browser.
SNMP (simple network management protocol)	Used by network programs for product management. SNMP V1 and standard MIB-II (Management Information Base) objects are supported.

Table 1-5 IP addressing

Service name	Description
DHCP (dynamic host configuration protocol), IPv4, and IPv6	For Automatic IP address assignment. DHCP server provides the product with an IP address. Generally requires no user intervention for product to obtain IP address from a DHCP server.

Table 1-5 IP addressing (continued)

Service name	Description
BOOTP (bootstrap protocol)	For Automatic IP address assignment. BOOTP server provides the product with an IP address. Requires administrator to input the product MAC hardware address on BOOTP server in order for product to obtain an IP address from that server.
Auto IP	For Automatic IP address assignment. If neither a DHCP server nor a BOOTP server is present, this service allows the product to generate a unique IP address.

2 Control panel

HP Color LaserJet CM2320 control panel

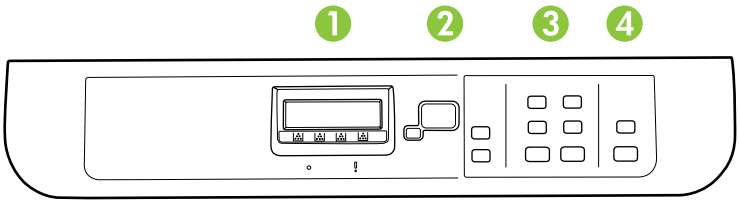

1	**Liquid Crystal Display**
2	**OK button and navigation arrows.** Use these buttons to select and confirm menu choices. **Cancel button.** Use this button to cancel the current menu selection. **Setup button.** Access the main Setup menu. **Back button.** Go back to the previous menu.
3	**Copy Menu button.** Access the Copy menu. **Start Copy Black button.** Perform a black and white copy operation. **Start Copy Color button.** Perform a color copy operation.
4	**Scan Menu button.** Access the scan menu. **Start Scan button.** Perform a scan operation.

HP Color LaserJet CM2320 MFP Fax Model and HP Color LaserJet CM2320 MFP Memory-Card Model control panel

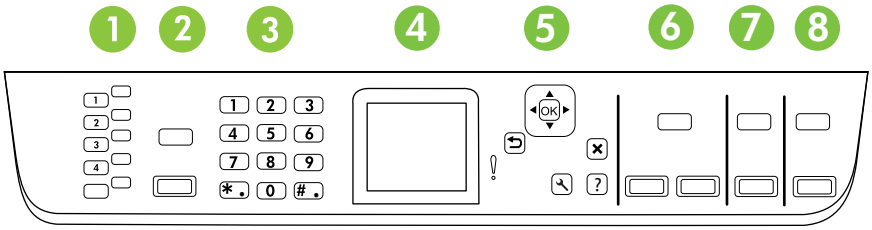

1	**Speed dials.** 4 speed dial buttons and one shift button to support up to 8 speed dials.
2	**Fax Menu button.** Access the fax menu. **Start Fax button.** Initiate a fax from the control panel.
3	**Alphanumeric buttons.** Use the alphanumeric buttons to type data into the product control-panel display and dial telephone numbers for faxing.
4	**Color graphics display**
5	**OK button and navigation arrows.** Use these buttons to select and confirm menu choices. **Cancel button.** Use this button to cancel the current menu selection. **Setup button.** Access the main Setup menu. **Back button.** Go back to the previous menu.
6	**Copy Menu button.** Access the copy menu. **Start Copy Black button.** Perform a black and white copy operation. **Start Copy Color button.** Perform a color copy operation.
7	**Scan Menu button.** Access the scan menu. **Start Scan button.** Perform a scan operation.
8	**Email Menu button (HP Color LaserJet CM2320 MFP Fax Model only).** Access the e-mail menu. **Start Email button (HP Color LaserJet CM2320 MFP Fax Model only).** Start a scan to e-mail. **Photo Menu button (HP Color LaserJet CM2320 MFP Memory-Card Model only).** Access the photo menu. **Start Photo button (HP Color LaserJet CM2320 MFP Memory-Card Model only).** Print the selected photos from the memory card.

Control-panel menus

Use the control-panel menus

To gain access to the control-panel menus, use the following steps.

1. Press Setup 🔧.

   NOTE: To access the function-specific menus press Fax Menu, Copy Menu, Scan Menu, or Photo Menu.

2. Use the arrow buttons to navigate the listings.

- Press OK to select the appropriate option.
- Press Cancel to cancel an action or return to the Ready state.

Control-panel Setup menu

These sub menus are available from the control-panel main Setup menu:

- Use the **Copy setup** menu to configure basic copy default settings such as contrast, collation, or the number of copies printed.
- Use the **Reports** menu to print reports that provide information about the product.
- Use the **Fax setup** (HP LaserJet CM2320 Fax Model / CM2320 Memory-Card Model only) menu to configure the fax phone book, the outgoing and incoming fax options, and the basic settings for all faxes.
- Use the **Photo setup** (HP Color LaserJet CM2320 MFP Memory-Card Model only) menu to configure the basic settings for printing photos from a memory card.
- Use the **System setup** menu to establish basic product settings such as language, print quality, or volume levels.
- Use the **Service** menu to restore default settings, clean the product, and activate special modes that affect print output.
- Use the **Network configuration** menu to configure network settings such as TCP/IP configuration.

NOTE: To print a detailed list of the entire control-panel menu and its structure, print a menu map. See Information pages on page 50.

Table 2-1 Copy setup menu

Menu item	Sub-menu item	Description
Default Optimize	**Auto Select**	Sets the default copy quality.
	Mixed	
	Printed Picture	
	Photograph	
	Text	
Default lighter/darker		Sets the default contrast option.

Table 2-1 Copy setup menu (continued)

Menu item	Sub-menu item	Description
Default Collation	**On** **Off**	Sets the default collation option.
Default number of copies	(Range: 1-99)	Sets the default number of copies.
Default Reduce/Enlarge	**Original=100%** **Legal to Letter=78%** **Legal to A4=83%** **A4 to Letter=94%** **Letter to A4=97%** **Full Page=91%** **Fit to page** **2 pages per sheet** **4 pages per sheet** **Custom: 25 to 400%**	Sets the default percentage to reduce or enlarge a copied document.
Default Tray Select	**Auto Select** **Tray 1** **Tray 2** **Tray 3** (if the tray is installed)	Sets the default input paper tray.
Default 2-Sided (memory-card models only)	**1 to 1 sided** **1 to 2 sided** **2 to 2 sided** **2 to 1 sided**	Sets the default input scan format and the default output format.
Default Copy Draft	**On** **Off**	Sets the default draft mode option.
Default Multi-page	**On** **Off**	Sets the default multi-page flatbed copy option.

Table 2-1 Copy setup menu (continued)

Menu item	Sub-menu item	Description
Advanced	**Color Copy**	Enables or disables the color copy button.
	Lightness	The default light/dark setting for copies. Possible values range from 1 to 11 with 6 being the default (no change) value.
	Contrast	The default contrast setting for copies. Possible values range from 1 to 11 with 6 being the default (no change) value.
	Sharpen	The default sharpen setting for copies. Possible values range from 1 to 11 with 6 being the default (no change) value.
	Background Removal	The default background removal setting for copies. Possible values range from 1 to 11 with 6 being the default (no change) value.
	Color Balance	The default color balance setting for copies. Possible values range from 1 to 11 with 6 being the default (no change) value. Values can be set for each of the following settings: • **Red** • **Green** • **Blue**
	Grayness	The default grayness setting for copies. Possible values range from 1 to 11 with 6 being the default (no change) value.
Restore defaults		Sets all customized copy settings to the factory default values.

Table 2-2 Reports menu

Menu Item	Description
Demo page	Prints a page that demonstrates print quality.
Menu structure	Prints a control-panel menu layout map.
Configuration report	Prints a list of all the product settings. Includes network information when the product is connected to the network.
Supplies status page	Prints the print-cartridge status. Includes the following information: • Approximate pages remaining • Serial number • Number of pages printed
Network report	Displays status for: • Network hardware configuration • Enabled features • TCP/IP and SNMP information • Network statistics
Usage page	Displays the number of pages printed, faxed, copied, and scanned by the product.
PCL font list	Prints a list of all installed PCL 5 fonts.

Table 2-2 Reports menu (continued)

Menu Item	Description
PS font list	Prints a list of all installed PS fonts.
PCL6 font list	Prints a list of all installed PCL 6 fonts.
Color usage log	Prints out information about the color toner usage
Service page	Prints out diagnostic information about calibration and color quality

Table 2-3 Photo setup menu

Menu Item	Sub-menu item	Sub-menu item	Description
Default image Size	(List of available photo image sizes)		The default image size for photos
Default lighter/ darker			The default light/dark setting for photos. Possible values range from 1 to 11 with 6 being the default (no change) value.
Default number of copies			The default number of copies setting for photos. Possible values range from 1 to 99.
Default output color	**Color** **Black & white**		Specify the default output for photos.
Restore defaults			Restore the factory default settings for photo setup

Table 2-4 Fax setup menu (fax models only)

Menu Item	Sub-menu item	Sub-menu item	Description
Fax Set-up Utility			Utility for configuring the fax settings. Follow the on-screen prompts and select the appropriate response for each question using the arrow keys.

Table 2-4 Fax setup menu (fax models only) (continued)

Menu Item	Sub-menu item	Sub-menu item	Description
Basic setup	**Time/Date**	(Settings for time format, current time, date format, and current date.)	Sets the time and date setting for the product.
	Fax Header	**Your fax number** **Company name**	Sets the identifying information that is sent to the receiving product.
	Answer mode	**Automatic** **TAM** **Fax/Tel** **Manual**	Sets the type of answer mode. The following options are available: • **Automatic**: The product automatically answers an incoming call on the configured number of rings. • **TAM**: A telephone answering machine (TAM) is attached to the Aux phone port of the product. The product will not pick up any incoming call, but only listen for fax tones after the answering machine has picked up the call. • **Fax/Tel**: The product must automatically pick up the call and determine if the call is a voice or fax call. If the call is a fax call, the product handles the call as usual. If the call is a voice call, an audible synthesized ring is generated to alert the user of an incoming voice call. • **Manual** : The user must press the Start Fax button or use an extension phone to make the product answer the incoming call.
	Rings to answer	(Range of 1-9)	Sets the number of rings that must occur before the fax modem answers.
	Distinctive Ring	**All Rings** **Single** **Double** **Triple** **Double and Triple**	Allows a user to have two or three phone numbers on a single line, each with a different ring pattern (on a phone system with distinctive-ring service). • **All Rings**: The product answers any calls that come through the telephone line. • **Single**: The product answers any calls that produce a single-ring pattern. • **Double**: The product answers any calls that produce a double-ring pattern. • **Triple**: The product answers any calls that produce a triple-ring pattern. • **Double and Triple**: The product answers any calls that produce a double-ring or triple-ring pattern.
	Dial Prefix	**On** **Off**	Specifies a prefix number that must be dialed when sending faxes from the product.

Table 2-4 Fax setup menu (fax models only) (continued)

Menu Item	Sub-menu item	Sub-menu item	Description
Advanced setup	**Default Fax Resolution**	**Standard** **Fine** **Superfine** **Photo**	Sets the resolution for sent documents. Higher resolution images have more dots per inch (dpi), so they show more detail. Lower resolution images have fewer dots per inch and show less detail, but the file size is smaller.
	Default lighter/ darker		Sets the darkness of outgoing faxes.
	Fit to page	**On** **Off**	Shrinks faxes that are larger than Letter-size or A4-size so that they can fit onto a Letter-size or A4-size page. If this feature is set to **Off**, faxes larger than Letter or A4 will print on multiple pages.
	Default glass size	**Letter** **A4**	Sets the default paper size for documents being scanned from the flatbed scanner.
	Dialing Mode	**Tone** **Pulse**	Sets whether the product should use tone or pulse dialing.
	Redial if busy	**On** **Off**	Sets whether or not the product should attempt to redial if the line is busy.
	Redial if no answer	**On** **Off**	Sets whether the product should attempt to dial if the recipient fax number does not answer.
	Redial Comm. Error	**On** **Off**	Sets whether the product should attempt to redial the recipient fax number if a communication error occurs.

Table 2-4 Fax setup menu (fax models only) (continued)

Menu Item	Sub-menu item	Sub-menu item	Description
Advanced setup	**Detect dial tone**	**On** **Off**	Sets whether the product should check for a dial tone before sending a fax.
	Billing codes	**On** **Off**	Enables the use of billing codes when set to **On**. A prompt will appear that asks you to enter the billing code for an outgoing fax.
	Extension Phone	**On** **Off**	When this feature is enabled, the user can press the **1-2-3** buttons on the extension phone to cause the product to answer an incoming fax call.
	Stamp faxes	**On** **Off**	Sets product to add the date, time, sender's phone number, and page number to each page of the faxes that this product receives.
	Private receive	**On** **Off**	Setting **Private receive** to **On** requires the user to have set a password in product security. After the password is set, the following options are set: • **Private receive** is turned on. • All old faxes are deleted from memory. • **Fax forwarding** set to **Off** and is not allowed to be changed. • All incoming faxes are stored in memory.
	Fax Number Confirmation	**On** **Off**	Verify that a fax number is valid by entering it a second time.
	Allow Fax Reprint	**On** **Off**	Sets whether all received faxes stored in available memory can be reprinted.
	Fax/Tel Ring Time	**20** **30** **40** **70**	Sets when the product should stop sounding the **Fax/Tel** audible ring to notify the user of an incoming voice call.
	Print Duplex (duplex models only)	**On** **Off**	Sets whether all received faxes are printed using both sides of the paper.
	Fax Speed	**Fast(V.34)** **Medium(V.17)** **Slow(V.29)**	Increases or decreases the allowed fax communication speed.

Table 2-5 System setup menu

Menu Item	Sub-menu item	Sub-menu item	Description
Language	(List of available control-panel display languages.)		Sets the language in which the control panel displays messages and product reports.

Table 2-5 System setup menu (continued)

Menu Item	Sub-menu item	Sub-menu item	Description
Paper setup	**Default paper size**	**Letter** **A4** **Legal**	Sets the size for printing internal reports or any print job that does not specify a size.
	Default paper type	Lists available media types.	Sets the type for printing internal reports or any print job that does not specify a type.
	Tray 1	**Paper type** **Paper size**	Sets the default size and type for Tray 1.
	Paper out action	**Wait forever** **Cancel** **Override**	Determines how the product reacts when a print job requires a media size or type that is unavailable or when a specified tray is empty. • Select **Wait forever** to make the product wait until the correct media is loaded. • Select **Override** to print on a different size paper after a specified delay. • Select **Cancel** to automatically cancel the print job after a specified delay. • If either **Override** or **Cancel** is chosen, the control panel prompts for the number of seconds to delay. Use the arrow keys to either decrease the time or increase the time up to 3,600 seconds.
Print quality	**Calibrate color**	**Calibrate now** **After power on**	Perform a Color Pane Registration (CPR) and density calibration. Select **Calibrate now** to perform an immediate calibration. Select **After power on** to specify the minutes/hours the product should wait after power on to perform an automatic calibration (the default is 15 minutes).
	Cartridge low threshold	(Range of 1-20)	Sets the percentage at which the control panel generates a low-toner message.
	Replace Supplies	**Stop at out** **Override out**	Sets how the product reacts when it detects that the print cartridge is out.
	Color Supply Out	**Stop Printing** **Continue Black**	Sets how the product should react when it detects that a color cartridge is empty. Select **Stop Printing** to stop all printing until the cartridge is replaced, or select **Continue Black** to continue printing in black monochrome mode.
Adjust Alignment (memory-card models only)	**Print Test Page**		Print out a tray-specific sheet of instructions and a test page with a border that can be used to estimate the adjustment needed to center the printed image on the page.
	Adjust Tray 1		After printing the test page, use the options in the **Adjust Tray 1** menu to calibrate the tray. The following settings can be adjusted for Tray 1: • **X1 Shift** • **Y Shift**

Table 2-5 System setup menu (continued)

Menu Item	Sub-menu item	Sub-menu item	Description
Volume Settings (memory-card models only)	**Alarm volume**	**Soft**	Sets the volume levels for the product.
	Ring volume	**Medium**	
	Key-press volume	**Loud**	
	Phone line volume	**Off**	
Time/Date	(Settings for time format, current time, date format, and current date.)		Sets the time and date setting for the product.
Product security	**On** **Off**		Sets the product-security feature. When the setting is set to **On**, you must set a personal identification number (PIN).
Courier font	**Regular** **Dark**		Sets Courier font values.

Table 2-6 Service menu

Menu item	Sub-menu item	Sub-menu item	Description
Fax Service	**Clear saved faxes**		Clear all faxes in memory. These include any received faxes (including non-printed, non-sent PC upload, and non-forwarded faxes), unsent faxes (including delayed faxes), and any printed faxes that are still in memory. Deleted faxes cannot be recovered. For each deleted item, the fax activity log is updated.
	Run Fax Test		Perform a fax test to verify that the phone cord is plugged in the correct outlet and that there is a signal on the phone line. A fax test report is printed indicating the results.
	Print T.30 trace	**Now** **Never** **If error** **At end of call**	Prints or schedules a report that is used to troubleshoot fax transmission issues.
	Error correction	**On** **Off**	The error correction mode allows the sending device to re-transmit data if it detects an error signal. The default setting is on.
	Fax Service Log		The fax service log prints out the last 40 entries in the fax log.
Cleaning mode			Cleans the product when specks or other marks appear

Table 2-6 Service menu (continued)

Menu item	Sub-menu item	Sub-menu item	Description
			on printed output. The cleaning process removes dust and excess toner from the paper path. When selected, the product prompts you to load plain Letter or A4 paper in Tray 1. Press OK to begin the cleaning process. Wait until the process completes. Discard the page that prints.
1 minute	**Off** **1 minute** **15 minutes** **30 minutes** **1 hour** **2 hours** **4 hours**		Specify the amount of idle time before the product enters sleep mode.
USB speed	**High** **Full**		Sets the USB speed.
Less paper curl	**On** **Off**		When printed pages are consistently curled, this option sets the product to a mode that reduces curl. The default setting is **Off**.
Archive print	**On** **Off**		When printing pages that will be stored for a long time, this option sets the product to a mode that reduces toner smearing and dusting. The default setting is **Off**.
Restore defaults			Sets all customized settings to the factory default values.

Table 2-7 Network configuration menu

Menu item	Sub-menu item	Description
TCP/IP configuration	**Automatic** **Manual**	**Automatic** automatically configures all the TCP/IP settings via DHCP, BootP or AutoIP. **Manual** requires you to manually configure the IP address, subnet mask, and default gateway. The control panel prompts you to specify values for each address section. Use the arrow buttons to increase or decrease the value. Press OK to accept the value and move the cursor to the next field.

Table 2-7 Network configuration menu (continued)

Menu item	Sub-menu item	Description
		As each address is completed, the product prompts for address confirmation before moving to the next one. After all three addresses are set, the product automatically restarts.
Memory Card (memory-card products only)	**On** **Off**	Enables or disables the use of the memory-card slots.
Auto crossover	**On** **Off**	Enable or disable the use of a standard 10/100 network cable when the product is directly connected to a PC.
Network services	**IPv4** **IPv6** **DHCPv6**	Sets whether the product will use either IPv4, IPv6, or DHCPv6 protocol.
Show IP address	**Yes** **No**	Sets whether the product displays the IP address on the control panel.
Link speed	**Automatic** (Default) **10T Full** **10T Half** **100TX Full** **100TX Half**	Sets the link speed manually if needed. After setting the link speed, the product automatically restarts.
Restore defaults		Resets all network configurations to their factory defaults.

Function specific menus

The product features function-specific menus for faxing, copying, scanning, and managing photos on a memory card. To access these menus, press the Fax Menu, Copy Menu, Scan Menu, or Photo Menu buttons respectively.

These are the features supported by the function specific menus.

- Use the **Fax** menu to perform basic fax functions such as sending a fax or editing the phone book, reprinting faxes that were previously printed, or printing faxes that are stored in memory.
- Use the **Copy** menu to access basic copy functions and customize the copy output.
- Use the **Scan** menu to display a list of preconfigured folders and e-mail destinations to select from.
- Use the **Email** menu (HP Color LaserJet CM2320 MFP Fax Model only) to send e-mail.
- Use the **Photo** menu (HP Color LaserJet CM2320 MFP Memory-Card Model only) to display a list of photo options for a valid inserted memory card.

Table 2-8 Fax Menu

Menu item	Sub-menu item	Sub-menu item	Description
Send	**Send a fax**		Send a fax. On screen prompts guide the process.
	Redial		Redial the last fax number and resend.
	Send fax later		Allows a fax to be sent at a later time and date.
	Fax Job status		Displays pending fax jobs, and allows you to cancel pending fax jobs.
	Fax Resolution	**Standard** **Fine** **Superfine** **Photo**	Temporarily change the resolution of outgoing faxes. The resolution resets to default after 2 minutes of idle fax scan time.
Receive	**Print faxes**		Prints stored faxes when the private-receive feature is on. This menu item appears only when the private-receive feature is turned on.
	Block junk faxes	**Add number** **Delete number** **Delete All Entries** **Junk Fax list**	Modifies the junk fax list. The junk fax list can contain up to 30 numbers. When the product receives a call from one of the junk fax numbers, it deletes the incoming fax. It also logs the junk fax in the activity log along with job-accounting information.
	Reprint faxes		Prints the received faxes stored in available memory.
	Forward fax	**On** **Off**	Sets product to send all received faxes to another fax machine.
	Polling receive		Allows the product to call another fax machine that has polling send enabled.

Table 2-8 Fax Menu (continued)

Menu item	Sub-menu item	Sub-menu item	Description
Phone Book	**Select an entry**		Select an individual or group dial entry for faxing.
	Individual Setup		Edits the fax phone book speed dials and group-dial entries. The product supports up to 120 phone book entries, which can be either individual or group entries.
	Group setup		
	Delete entry	Delete a specific phone book entry.	
	Delete All Entries		Delete all entries in the phone book
	Phone Book report		Print a list of all the individual and group dial entries in the phone book.

Table 2-8 Fax Menu (continued)

Menu item	Sub-menu item	Sub-menu item	Description
Fax Reports	**Fax Confirmation**	**Never** **Every fax** **Send fax only** **Receive fax**	Sets whether or not the product prints a confirmation report after a successful sending or receiving job.
	Include first page	**On** **Off**	Sets whether or not the product includes a thumbnail image of the first page of the fax on the report.
	Fax Error Report	**Every error** **Send Error** **Receive Error** **Never**	Sets whether or not the product prints a report after a failed sending or receiving job.
	Last Call Report		Prints a detailed report of the last fax operation, either sent or received.
	Fax Activity log	**Print log now** **Auto Log Print**	**Print log now**: Prints a list of the faxes that have been sent from or received by this product. **Auto Log Print**: Select **On** to automatically print a report after every fax job. Select **Off** to turn off the automatic print feature.
	Phone Book report		Prints a list of the speed dials that have been set up for this product.
	Junk Fax list		Prints a list of phone numbers that are blocked from sending faxes to this product.
	Billing report		Prints a list of billing codes that have been used for outgoing faxes. This report shows how many sent faxes were billed to each code. This menu item appears only when the billing codes feature is turned on.
	All fax reports		Prints all fax-related reports.

Table 2-9 Photo Menu

Menu item	Sub-menu item	Sub-menu item	Description
View			View photos on the memory card. Use the arrow buttons to navigate through the photos.

Table 2-9 Photo Menu (continued)

Menu item	Sub-menu item	Sub-menu item	Description
Easy Print	**Individual photo** **All photos (#-#)** **A range of photos** **Custom**		Print photos quickly from the memory card by selecting the numbers of the photos you want to print.
Thumbnail	**Fast** **Best**		Print thumbnails of photos from the memory card (30 per page).
Options	**Proof Sheet**	**Print proof sheet** **Scan proof sheet**	Print a proof sheet or scan a proof sheet. The proof sheet is a page of thumbnails (20 per page) generated from a valid memory card. A marked proof sheet can then be scanned and the selected images are printed at full size.
	Current Settings	**Select image size** **Select paper size** **Select paper type** **Number of copies** **Output Color**	Adjust the default photo settings for image size, paper size, paper type, number of copies, and output color (color or black and white).
	Rotate Photo		Rotate a photo stored on a memory card.
	Slideshow		View a slideshow of the photos on a memory card.

Table 2-10 Copy Menu

Menu item	Sub-menu item	Description
Copies	**(1–99)**	Specify the number of copies
Size	**Original=100%** **Legal to Letter=78%** **Legal to A4=83%** **A4 to Letter=94%** **Letter to A4=97%** **Full Page=91%** **Fit to page** **2 pages per sheet** **4 pages per sheet** **Custom: 25 to 400%**	Specify the size of the copy.

Table 2-10 Copy Menu (continued)

Menu item	Sub-menu item	Description
Light/Dark		Specify the contrast of the copy.
Options	**Optimize**	Select settings to optimize the copy print quality.
	Copy Paper	Specify the paper type for the copies.
	Multi-Page Copy	Copy multiple pages.
	Copy Collation	Specify the copy collation
	Tray Select	Select the tray to copy from.
	Copy 2-Sided	Copy multiple sides and print duplex.
Copy Draft		Specify the print quality for copies.
Image Adjustment	**Lightness**	Adjust the settings for image quality in a copy.
	Contrast	
	Sharpen	
	Background	
	Color Balance	
	Grayness	

3 Paper and print media

Understand paper and print media use

This product supports a variety of paper and other print media in accordance with the guidelines in this user guide. Paper or print media that does not meet these guidelines might cause the following problems:

- Poor print quality
- Increased jams
- Premature wear on the product, requiring repair

For best results, use only HP-brand paper and print media designed for laser printers or multiuse. Do not use paper or print media made for inkjet printers. Hewlett-Packard Company cannot recommend the use of other brands of media because HP cannot control their quality.

It is possible for paper to meet all of the guidelines in this user guide and still not produce satisfactory results. This might be the result of improper handling, unacceptable temperature and/or humidity levels, or other variables over which Hewlett-Packard has no control.

△ **CAUTION:** Using paper or print media that does not meet Hewlett-Packard's specifications might cause problems for the product, requiring repair. This repair is not covered by the Hewlett-Packard warranty or service agreements.

Supported paper and print media sizes

This product supports a number of paper sizes, and it adapts to various media.

NOTE: To obtain best print results, select the appropriate paper size and type in the print driver before printing.

Table 3-1 Supported paper and print media sizes

Size	Dimensions	Tray 1	Trays 2 and 3
Letter	216 x 279 mm (8.5 x 11 inches)	✔	✔
Legal	216 x 356 mm (8.5 x 14 inches)	✔	✔
A4	210 x 297 mm (8.27 x 11.69 inches)	✔	✔
Executive	184 x 267 mm (7.24 x 10.51 inches)	✔	✔
A3	297 x 420 mm (11.69 x 16.54 inches)		
A5	148 x 210 mm (5.83 x 8.27 inches)	✔	✔
A6	105 x 148 mm (4.13 x 5.83 inches)	✔	✔
B5 (JIS)	182 x 257 mm (7.17 x 10.12 inches)	✔	✔
16k	197 x 273 mm (7.75 x 10.75 inches)	✔	
16k	195 x 270 mm (7.7 x 10.6 inches)	✔	
16k	184 x 260 mm (7.25 x 10.25 inches)	✔	✔
8.5 x 13	216 x 330 mm (8.5 x 13 inches)	✔	✔
4 x 6[1]	107 x 152 mm (4 x 6 inches)	✔	✔
5 x 8[1]	127 x 203 mm (5 x 8 inches)	✔	✔
10 x 15 cm[1]	100 x 150 mm (3.9 x 5.9 inches)	✔	✔
Custom	**Tray 1**: Minimum—76 x127 mm (3 x 5 inches); Maximum—216 x 356 mm (8.5 x 14 inches)	✔	
	Trays 2 and 3: Minimum—100 x 148 mm (3.9 x 5.83 inches); Maximum—216 x 356 mm (8.5 x 14 inches)		✔

[1] These sizes are supported as custom sizes.

Table 3-2 Supported envelopes and postcards

Size	Dimensions	Tray 1	Trays 2 and 3
Envelope #10	105 x 241 mm (4.13 x 9.49 inches)	✔	✔

Table 3-2 Supported envelopes and postcards (continued)

Size	Dimensions	Tray 1	Trays 2 and 3
Envelope DL	110 x 220 mm (4.33 x 8.66 inches)	✔	✔
Envelope C5	162 x 229 mm (6.93 x 9.84 inches)	✔	✔
Envelope B5	176 x 250 mm (6.7 x 9.8 inches)	✔	✔
Envelope Monarch	98 x 191 mm (3.9 x 7.5 inches)	✔	✔
Postcard	100 x 148 mm (3.94 x 5.83 inches)	✔	✔
Double postcard	148 x 200 mm (5.83 x 7.87 inches)	✔	✔

Supported paper types and tray capacity

Media type	Dimensions[1]	Weight	Capacity[2]	Paper orientation
Paper, including the following types: • Plain • Letterhead • Color • Preprinted • Prepunched • Recycled	Minimum: 76 x 127 mm (3 x 5 inches) Maximum: 216 x 356 mm (8.5 x 14 inches)	60 to 90 g/m^2 (16 to 24 lb)	Tray 1: up to 50 sheets Trays 2 and 3: up to 250 sheets of 75 g/m^2 (20 lb bond)	Side to be printed on face-up, with the top edge at the back of the tray
Thick paper	Same as for paper	Up to 200 g/m^2 (53 lb)	Tray 1: single sheet only Trays 2 and 3: up to 25 mm (0.98 inch) stack height	Side to be printed on face-up, with the top edge at the back of the tray
Cover paper	Same as for paper	Up to 200 g/m^2 (53 lb)	Tray 1: single sheet only Trays 2 and 3: up to 25 mm (.98 inch) stack height	Side to be printed on face-up, with the top edge at the back of the tray
Glossy paper Photo paper	Same as for paper	Up to 220 g/m^2 (59 lb)	Tray 1: single sheet only Trays 2 and 3: up to 25 mm (.98 inch) stack height	Side to be printed on face-up, with the top edge at the back of the tray
Transparencies	A4 or Letter	Thickness: 0.12 to 0.13 mm (4.7 to 5.1 mils)	Tray 1: single sheet only Trays 2 and 3: up to 25 mm (.98 inch) stack height	Side to be printed on face-up, with the top edge at the back of the tray
Labels[3]	A4 or Letter	Thickness: up to 0.23 mm (9 mils)	Tray 1: single sheet only Trays 2 and 3: up to 25 mm (.98 inch) stack height	Side to be printed on face-up, with the top edge at the back of the tray
Envelopes	• COM 10 • Monarch • DL • C5 • B5	Up to 90 g/m^2 (24 lb)	Tray 1: up to 10 envelopes Trays 2 and 3: up to 30 envelopes	Side to be printed on face-up, with the stamp-end at the back of the tray
Postcards or index cards	100 x 148 mm (3.9 x 5.8 inches)		Tray 1: single sheet only	Side to be printed on face-up, with the top edge at the back of the tray

Media type	Dimensions[1]	Weight	Capacity[2]	Paper orientation
			Trays 2 and 3: up to 25 mm (.98 inch) stack height	

[1] The product supports a wide range of standard and custom sizes of print media. Check the printer driver for supported sizes.

[2] Capacity can vary depending on media weight and thickness, and environmental conditions.

[3] Smoothness: 100 to 250 (Sheffield)

Special paper or print media guidelines

This product supports printing on special media. Use the following guidelines to obtain satisfactory results. When using special paper or print media, be sure to set the type and size in your print driver to obtain the best print results.

△ **CAUTION:** HP LaserJet printers use fusers to bond dry toner particles to the paper in very precise dots. HP laser paper is designed to withstand this extreme heat. Using inkjet paper not designed for this technology could damage your printer.

Media type	Do	Do not
Envelopes	• Store envelopes flat. • Use envelopes where the seam extends all the way to the corner of the envelope. • Use peel-off adhesive strips that are approved for use in laser printers.	• Do not use envelopes that are wrinkled, nicked, stuck together, or otherwise damaged. • Do not use envelopes that have clasps, snaps, windows, or coated linings. • Do not use self-stick adhesives or other synthetic materials.
Labels	• Use only labels that have no exposed backing between them. • Use Labels that lie flat. • Use only full sheets of labels.	• Do not use labels that have wrinkles or bubbles, or are damaged. • Do not print partial sheets of labels.
Transparencies	• Use only transparencies that are approved for use in laser printers. • Place transparencies on a flat surface after removing them from the product.	• Do not use transparent print media not approved for laser printers.
Letterhead or preprinted forms	• Use only letterhead or forms approved for use in laser printers.	• Do not use raised or metallic letterhead.
Heavy paper	• Use only heavy paper that is approved for use in laser printers and meets the weight specifications for this product.	• Do not use paper that is heavier than the recommended media specification for this product unless it is HP paper that has been approved for use in this product.
Glossy or coated paper	• Use only glossy or coated paper that is approved for use in laser printers.	• Do not use glossy or coated paper designed for use in inkjet products.

Load paper and print media

Load Tray 1

Tray 1 holds up to 50 sheets of 75 g/m^2 (20 lb) media or five envelopes, ten transparencies, or ten cards. You can use Tray 1 to print the first page on media different from the remainder of the document.

1. Open Tray 1.

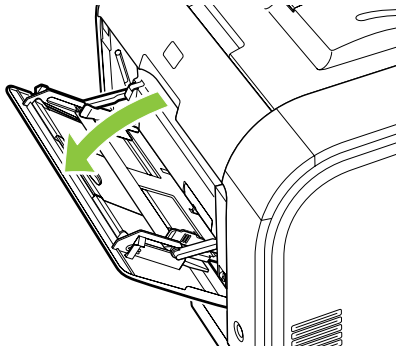

2. If loading long sheets of media, pull out the extension tray.

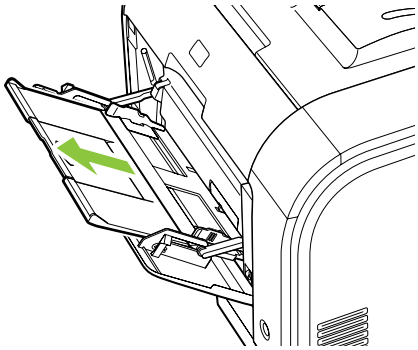

3. If necessary, flip out the extension.

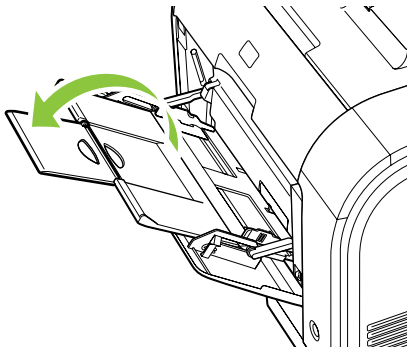

4. Extend the paper guides fully (callout 1) and then load the media stack into Tray 1 (callout 2). Adjust the paper guides to the size of the paper.

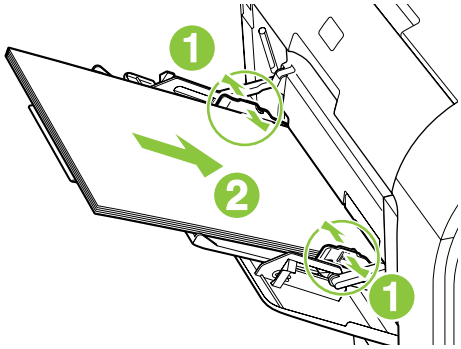

Load Tray 2 or 3

Tray 2 and optional Tray 3 hold up to 250 pages of 75 g/m^2 (20 lb) paper, or fewer pages of heavier media (25 mm (0.9 in) or less stack height). Load media with the top forward and the side to be printed on facing up.

1. Pull the tray out of the product.

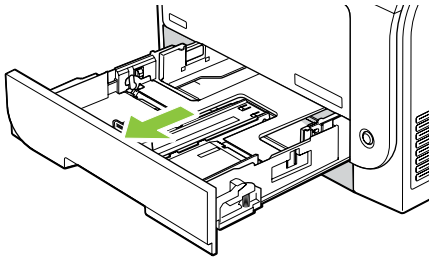

2. Slide open the paper length and width guides.

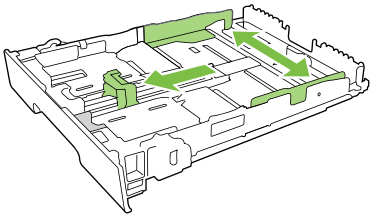

- To load Legal-size paper, extend the tray by pressing and holding the extension tab while pulling the front of the tray toward you.

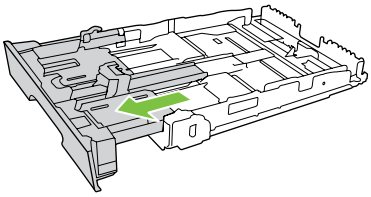

NOTE: When it is loaded with Legal-size paper, the tray extends from the front of the product approximately 64 mm (2.5 inches).

3. Place the paper in the tray and make sure that it is flat at all four corners. Slide the paper length and width guides so that they are against the stack of paper.

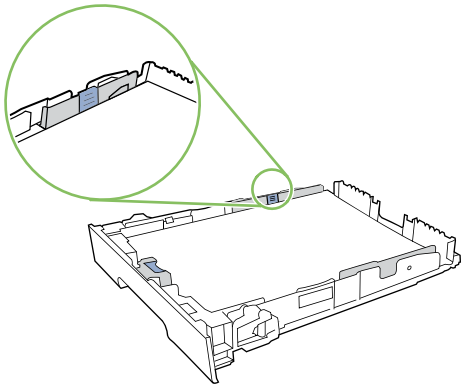

4. Push down on the paper to make sure that the paper stack is below the paper limit tabs on the side of the tray.

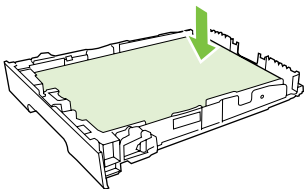

5. Slide the tray into the product.

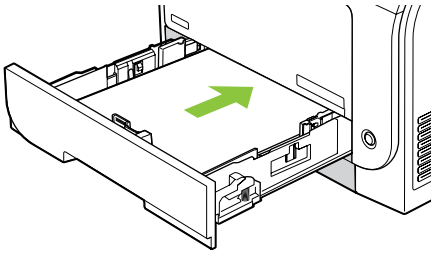

NOTE: When it is loaded with Legal-size paper, the tray extends from the front of the product approximately 64 mm (2.5 inches).

Load originals for copying, scanning, or faxing

Automatic document feeder (ADF)

NOTE: The ADF capacity is up to 50 sheets of 80 g/m^2 or 20 lb media.

CAUTION: To prevent damage to the product, do not use an original that contains correction tape, correction fluid, paper clips, or staples. Also, do not load photographs, small originals, or fragile originals into the ADF. Use the flatbed glass to scan these items.

1. Insert the top-end of the stack of originals into the ADF input tray, with the media stack face-up and the first page to be copied or scanned on top of the stack.

   If the media is longer than letter- or A4-sized paper, pull out the ADF input tray extension to support the media.

2. Slide the stack into the ADF until it does not move any farther.

Document loaded appears on the control-panel display.

3. Adjust the media guides until they are snug against the media.

Flatbed glass

NOTE: The maximum media size for flatbed copying is letter. Use the ADF for copying or scanning media larger than letter.

1. Make sure that the automatic document feeder (ADF) contains no media.
2. Lift the flatbed scanner cover.

3. Place the original document face-down on the flatbed glass with the upper-left corner of the document at the corner indicated by the icon on the scanner.

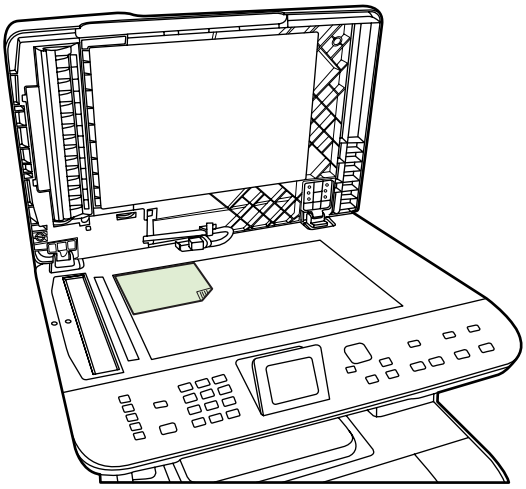

4. Gently close the lid.

Configure trays

When using one of the trays for specific size of paper, you can set the default size for the tray in HP ToolboxFX or from the control panel. In HP ToolboxFX, select **Paper handling**, and then select the size for the tray you want to set. When you select that size of paper for a print job in the print dialog, the product automatically selects that tray for printing.

To set the default paper size or type from the control panel, complete the following steps.

1. On the product control panel, press Setup.
2. Use the arrow buttons to highlight **System setup**, and then press OK.
3. Use the arrow buttons to highlight **Paper setup**, and then press OK.
4. Use the arrow buttons to highlight the tray to be configured, and then press OK.
5. Use the arrow buttons to highlight either **Paper type** or **Paper size**, and then press OK.
6. Use the arrow buttons to highlight a default type or size for the tray, and then press OK.

4 Manage and maintain the product

Information pages

Information pages reside within the product memory. These pages help diagnose and solve problems with the product.

NOTE: If the product language was not correctly set during installation, you can set the language manually so the information pages print in one of the supported languages. Change the language by using the **System setup** menu on the control panel or the embedded Web server. See Control panel on page 17.

Page description	How to print the page
Configuration page Shows the current settings and product properties.	1. On the product control panel, press Setup. 2. Use the arrow buttons to select **Reports**, and then press OK. 3. Use the arrow buttons to select **Configuration report**, and then press OK. A second page also prints (fax models only). On that page, the **Fax Settings** section provides details about the product fax settings.
Supplies status page Shows the remaining life of the HP print cartridge, the approximate pages remaining, the number of pages printed, and other supplies information.	1. On the product control panel, press Setup. 2. Use the arrow buttons to select **Reports**, and then press OK. 3. Use the arrow buttons to select **Supplies status**, and then press OK.
PCL, PCL 6, or PS font list Shows which fonts are currently installed in the device.	1. On the product control panel, press Setup. 2. Use the arrow buttons to select **Reports**, and then press OK. 3. Use the arrow buttons to select **PCL font list**, **PS font list**, or **PCL6 font list**, and then press OK.
Demo page Contains examples of text and graphics.	1. On the product control panel, press Setup. 2. Use the arrow buttons to select **Reports**, and then press OK. 3. Use the arrow buttons to select **Demo page**, and then press OK.
Event log	You can print the event log from HP ToolboxFX, the embedded Web server, or HP Web Jetadmin. See HP ToolboxFX on page 52, Embedded Web server on page 62, or the Web Jetadmin Help.
Usage page Shows the number of one-sided (simplexed) or two-sided (duplexed) pages, and the average percentage of coverage.	1. On the product control panel, press Setup. 2. Use the arrow buttons to select **Reports**, and then press OK. 3. Use the arrow buttons to select **Usage page**, and then press OK.

Page description	How to print the page
Menu structure Shows the control-panel menus.	1. On the product control panel, press Setup. 2. Use the arrow buttons to select **Reports**, and then press OK. 3. Use the arrow buttons to select **Menu structure**, and then press OK.
Network report Shows the product network settings.	1. On the product control panel, press Setup. 2. Use the arrow buttons to select **Reports**, and then press OK. 3. Use the arrow buttons to select **Network report**, and then press OK.
Fax reports (fax models only)	For information about fax logs and reports, see the user guide.
Color usage job log Provides a summary of color usage.	1. On the product control panel, press Setup. 2. Use the arrow buttons to select **Reports**, and then press OK. 3. Use the arrow buttons to select **Color usage job log**, and then press OK.
Service page Prints a service report.	1. On the product control panel, press Setup. 2. Use the arrow buttons to select **Reports**, and then press OK. 3. Use the arrow buttons to select **Service page**, and then press OK.
Diagnostics page Prints a diagnostics page pertaining to color calibration and color quality.	1. On the product control panel, press Setup. 2. Use the arrow buttons to select **Reports**, and then press OK. 3. Use the arrow buttons to select **Diagnostics page**, and then press OK.

HP ToolboxFX

HP ToolboxFX is a program that you can use to complete the following tasks:

- Check the product status.
- Configure the product settings.
- Configure pop-up-alert messages.
- View troubleshooting information.
- View online documentation.

You can view HP ToolboxFX when the product is directly connected to your computer or is connected to the network. You must perform a recommended software installation to use HP ToolboxFX.

NOTE: HP ToolboxFX is not supported for Windows Server 2003 or Macintosh operating systems. To use HP ToolboxFX, you must have TCP/IP protocol installed on your computer.

You do not have to have Internet access to open and use HP ToolboxFX.

View the HP ToolboxFX

Open HP ToolboxFX in one of these ways:

- In the Windows system tray, double-click the HP ToolboxFX icon ( ).
- On the Windows **Start** menu, click **Programs** (or **All Programs** in Windows XP and Vista), click **HP**, click **HP Color LaserJet CM2320 MFP Series**, and then click **HP ToolboxFX**.

Status

The **Status** folder contains links to the following main pages:

- **Device status**. This page indicates product conditions such as a jam or an empty tray. After you correct a problem, click **Refresh status** to update the product status.
- **Supplies status**. View details such as the approximate percent of toner remaining in the print cartridge and the number of pages that have been printed with the current print cartridge. This page also has links for ordering supplies and for finding recycling information.
- **Device configuration**. View a detailed description of the current product configuration, including the amount of memory installed and whether optional trays are installed.
- **Network summary**. View a detailed description of the current network configuration, including the IP address and network status.
- **Print info pages**. Print the configuration page and other information pages, such as the supplies status page. See Information pages on page 50.
- **Color usage job log**. View color usage information for the product.
- **Event log**. View a history of product errors. The most recent error is listed first.

Event log

The event log is a four-column table where the product events are logged for your reference. The log contains codes that correspond to the error messages that appear on the product control-panel display. The number in the Page Count column specifies the total number of pages that the product had printed when the error occurred. The event log also contains a brief description of the error. For more information about error messages, see Control-panel messages on page 257.

Alerts

The HP ToolboxFX **Alerts** tab contains links to the following main pages:

- **Set up Status Alerts**. Set up the product to send you pop-up alerts for certain events, such as low toner levels.
- **Set up E-mail Alerts**. Set up the product to send you e-mail alert messages for certain events, such as low toner levels.

Set up status alerts

Use HP ToolboxFX to set up the product so that it issues pop-up alerts to your computer when certain events occur. Events that trigger alerts include jams, low levels of toner in HP print cartridges, non-HP print cartridge in use, empty input trays, and specific error messages.

Select the pop-up format, the tray icon format, or both for the alerts. The pop-up alerts only appear when the product is printing from the computer on which you set up the alerts.

Change the **Cartridge low threshold** setting, which sets the toner level that causes a low toner alert, in **System Setup** on the **System Settings** tab.

NOTE: You must click **Apply** before the changes take effect.

Set up e-mail alerts

Use this to configure up to two e-mail addresses to receive alert messages when certain events occur. You can specify different events for each e-mail address. Use the information for the e-mail server that will send out the e-mail alert messages for the product.

NOTE: You can only configure e-mail alerts to be sent from a server that does not require user authentication. If your e-mail server requires you to log in with a username and password, you cannot enable e-mail alerts.

NOTE: You must click **Apply** before your changes take effect.

Product information

The **Product information** folder contains links to the following page:

- **Demonstration Pages**. Print pages that show the color print quality potential and overall print characteristics of the product.

Fax

Use the HP ToolboxFX **Fax** tab to perform fax tasks from your computer. The **Fax** tab contains links to the following main pages:

- **Fax Receive**. Set the fax receive mode.
- **Fax Phone Book**. Add, edit, or delete entries in the product phone book.
- **Fax Send Log**. View all of the recent faxes that have been sent from the product.
- **Fax Receive Log**. View all of the recent faxes that have been received by the product.
- **Junk Faxes**. Add, delete, or view fax numbers that are blocked.
- **Fax Data Properties**. Manage the space used to store faxes on your computer. These settings apply only if you have chosen to send or receive faxes remotely from your computer.

Fax Receive

The following options are available when receiving a fax:

- Print the fax. You can also select an option to have a message appear on your computer to notifying you when the fax was printed.
- Forward the fax to another fax machine.

For more information about fax tasks, see the user guide.

NOTE: You must click **Apply** before the changes take effect.

Fax phone book

Use the HP ToolboxFX fax phone book to add and remove individuals or groups on your speed-dial list, import phone books from a variety of sources, and update and maintain the contact list.

- To add an individual contact to the speed-dial list, select the row of the speed dial number that you want to specify. Type the contact name in the **Contact name** window. Type the fax number in the **Fax number** window. Click **Add**.
- To add a group of contacts to the speed-dial list, select the row of the speed-dial number that you want to specify. Click **Add Group**. Double-click a contact name from the list on the left to move it to the group list on the right, or select a name on the left and then click the appropriate arrow to move it to the group list on the right. You can also use those two methods to move names from right to left. When you have created a group, type a name in the **Group name** window, and then click **OK**.
- To edit an existing individual speed-dial entry, click anywhere on the row containing the contact name to select it, and then click **Update**. Type changes in the appropriate windows, and then click **OK**.
- To edit an existing group-speed-dial entry, click anywhere on the row containing the group name to select it, and then click **Update Group**. Make any required changes, and then click **OK**.
- To delete an entry from the speed-dial list, select the item, and then click **Delete**.
- To move speed dial entries, select the entry and then click **Move**, or select **Move** and then specify the entry in the dialog box. Either select **Next empty row** or specify the number of the row where you want to move the entry.

NOTE: If you specify a row that is occupied, the new entry will overwrite the existing entry.

- To import contacts from a phone book that exists in Lotus Notes, Outlook, or Outlook Express, click **Import/Export Phone Book**. Select the **Import** option, and then click **Next**. Select the appropriate software program, navigate to the appropriate file, and then click **Finish**. To export contacts from a phone book, click **Import/Export Phone Book**. Select the **Export** option, and then click **Next**. Enter the file name or browse to the file to which you want to export contacts, and then click **Finish**. You can also select individual entries from the phone book instead of importing the entire phone book.
- To delete all entries, click **Delete All**, and then click **Yes**.

In addition to numerical digits, the following are valid characters for fax numbers:

- (
-)
- +
- -
- *
- #
- R
- W
- .
- ,
- <space>

NOTE: You must click **Apply** before the changes take effect.

For more information about faxes, see the user guide.

Fax send log

The HP ToolboxFX fax send log lists all recently sent faxes and information about them, including the date and time sent, job number, fax number, page count, and the results.

Click any column heading in the fax send log to re-sort the information in that column in ascending or descending order.

The **Results** column provides the fax status. If the fax attempt was unsuccessful, this column provides a description of why the fax was not sent.

For more information about faxes, see the user guide.

Fax receive log

The HP ToolboxFX fax receive log provides a list of all recently received faxes and information about them including the date and time received, job number, fax number, page count, results, and an abbreviated fax image.

The fax receive log can be used to block future faxes. Check the **Block Fax** box next to a received fax listed on the log.

When a computer that is connected to the product receives a fax, the fax contains a **View** link. Clicking this link opens a new page that provides information about the fax.

Click on any column heading in the fax receive log to re-sort the information in that column in ascending or descending order.

The **Results** column provides the fax status. If the fax attempt was unsuccessful, this column provides a description of why the fax was not received.

NOTE: You must click **Apply** before the changes take effect.

For more information about faxes, see the user guide.

Junk Faxes

Junk Faxes provides a list of all numbers that are blocked. Add, modify, or delete blocked fax numbers on this tab.

Help

The **Help** folder contains links to the following main pages:

- **Troubleshooting**. View troubleshooting help topics, print troubleshooting pages, clean the product, and open Microsoft Office Basic Colors. For more information about Microsoft Office Basic Colors, see the user guide.
- **Paper and Print Media**. Print information about how to obtain optimal results from your product using various types of paper and print media.
- **Color Printing Tools**. Open Microsoft Office Basic Colors or the full palette of color with associated RGB values. For more information about Microsoft Office Basic Colors, see the user guide. Use the HP Basic Color Match to adjust spot colors in your printed output.

- **Animated demonstrations**. View animated demonstrations for common troubleshooting procedures.
- **User Guide**. View information about the product usage, warranty, specifications, and support. The User Guide is available in both HTML and PDF format.

System Settings

The HP ToolboxFX **System Settings** tab contains links to the following main pages:

- **Device Information**. View information about the product, such as the product description and a contact person.
- **Paper Handling**. Change the product paper-handling settings, such as default paper size and default paper type.
- **Print Quality**. Change the product print-quality settings.
- **Print Density**. Change the print-density settings, such as contrast, highlights, midtones, and shadows.
- **Paper Types**. Change the mode settings for each media type, such as letterhead, prepunched, or glossy paper.
- **System Setup**. Change the system settings, such as jam recovery and auto-continue. Change the **Cartridge low threshold** setting, which sets the toner level that causes a Low toner pop-up alert.
- **Service**. Gain access to various procedures required to maintain the product.
- **Device Polling**. Change the product polling settings, which determine how often HP ToolboxFX collects data from the product.
- **Save/Restore Settings**. Save the current settings for the product to a file on the computer. Use this file to load the same settings onto another product or to restore these settings to this product at a later time.
- **Password**. Set, change, or clear the product security password (see Turn on password protection from the control panel on page 63).

Device Information

The Device Information page stores data about your product for future reference. The information that you type in the fields on this page appears on the Configuration page. You can type any character in each of these fields.

NOTE: You must click **Apply** before your changes take effect.

Paper Handling

The following options are available for handling print jobs when the product is out of media:

- Select **Wait for paper to be loaded**.
- Select **Cancel** from the **Paper out action** drop-down list to cancel the print job.
- Select **Override** from the **Paper out action** drop-down list to send the print job to another paper tray.

The **Paper out time** field specifies how long the product waits before acting on your selections. You can specify from 0 to 3600 seconds.

NOTE: You must click **Apply** before your changes take effect.

Print Quality

Use these options to improve the appearance of your print jobs.

Color Calibration

- **Power On Calibration**. Specify whether the product should calibrate when you turn it on.
- **Calibration Timing**. Specify how frequently the product should calibrate.
- **Calibrate Now**. Set the product to calibrate immediately.

NOTE: You must click **Apply** before your changes take effect.

Print Density

Use these settings to make fine adjustments in the amount of each color of toner that is used for your printed documents.

- **Contrasts**. Contrast is the range of difference between light (highlight) and dark (shadow) colors. To increase the overall range between light and dark colors, increase the **Contrasts** setting.
- **Highlights**. Highlights are colors that are nearly white. To darken highlight colors, increase the **Highlights** setting. This adjustment does not affect midtone or shadow colors.
- **Midtones**. Midtones are colors that are halfway between white and solid density. To darken midtone colors, increase the **Midtones** setting. This adjustment does not affect highlight or shadow colors.
- **Shadows**. Shadows are colors that are nearly solid density. To darken shadow colors, increase the **Shadows** setting. This adjustment does not affect highlight or midtone colors.

Paper Types

Use these options to configure print modes that correspond to the various media types. To reset all modes to factory default settings, select **Restore modes**.

NOTE: You must click **Apply** before your changes take effect.

System setup

Use the HP ToolboxFX system settings options to configure global settings for copy, fax, scan, and print, such as jam recovery and auto-continue.

NOTE: You must click **Apply** before the changes take effect.

Service

During the printing process, paper, toner and dust particles can accumulate inside the product. Over time, this buildup can cause print-quality problems such as toner specks or smearing. The HP ToolboxFX provides an easy method for cleaning the paper path. For more information, see Clean the product on page 73.

Device polling

You can turn off HP ToolboxFX device polling to reduce network traffic, but doing so also disables some HP ToolboxFX features: pop-up alerts, fax log updates, the ability to receive faxes to this computer, and scanning using the Scan To button.

NOTE: You must click **Apply** before the changes take effect.

Save/Restore

Saves printer settings to a file on your PC for backup.

Password

Set the system password. For more information about the system password, see Security features on page 63.

Print Settings

The HP ToolboxFX **Print Settings** tab contains links to the following main pages:

- **Printing**. Change the default product print settings, such as number of copies and paper orientation.
- **PCL5**. View and change the PCL5 settings.
- **PostScript**. View and change the PS settings.
- **Photo**. Change the photo settings and enable/disable the photo card slots (photo card models only).

Printing

Use these options to configure the settings for all print functions. These are the same options that are available on the control panel.

NOTE: You must click **Apply** before your changes take effect.

PCL5

Use these options to configure the settings when you are using the PCL print personality.

NOTE: You must click **Apply** before your changes take effect.

PostScript

Use this option when you are using the PostScript print personality. When the **Print PostScript error** option is turned on, the PostScript error page automatically prints when PostScript errors occur.

NOTE: You must click **Apply** before your changes take effect.

Network Settings

The network administrator can use this tab to control the network-related settings for the product when it is connected to an IP-based network.

E-mail

The HP ToolboxFX E-mail tab contains links to the following main pages:

- **E-mail Configuration**. Configure scan-to-e-mail settings
- **E-mail Contacts**. Make changes to the e-mail contacts list associated with the scan-to-e-mail feature.

E-mail configuration

Use the E-mail Configuration page to enable the scan-to-e-mail features and to specify the SMTP gateway, SMTP port, and other basic information. The SMTP gateway is a server that is used to send e-mail; for example, “mail.yourISP.com”. The SMTP port is a number between 0 and 65535. Contact your system administrator for this information.

Use the **Test Settings** button to test your scan-to-e-mail settings.

NOTE: You must click **Apply** before your changes take effect.

E-mail contacts

Use the HP ToolboxFX E-mail Contacts page to add and remove individuals from your e-mail contacts list. The e-mail contacts list can contain up to 50 entries.

To add a contact to the e-mail contacts list, type the contact’s name in the **Contact Name** window. Type the associated e-mail address in the **E-mail Address** window. Then click **Add**. You can also add a contact by double-clicking an empty row in the e-mail contacts list. Then type your contact’s information in the appropriate windows and click **OK**. If you select a row that is occupied, the new entry will overwrite the existing entry.

To edit an existing contact entry, select the row containing the contact name, and then click **Update**. Type changes in the appropriate window, and then click **OK**.

To delete an entry from the e-mail contacts list, select the item, and then click **Delete**. To delete all entries, click **Delete All**, and then click **Yes**.

NOTE: You must click **Apply** before your changes take effect.

Embedded Web server

This product is equipped with an embedded Web server (EWS), which provides access to information about product and network activities. A Web server provides an environment in which web programs may run, much in the same way that an operating system, such as Windows, provides an environment for programs to run on a computer. The output from these programs can then be displayed by a Web browser, such as Microsoft Internet Explorer, Safari, or Netscape Navigator.

An “embedded” Web server resides on a hardware device (such as an HP LaserJet product) or in firmware, rather than as software that is loaded on a network server.

The advantage of an EWS is that it provides an interface to the product that anyone with a network-connected product and computer can use. There is no special software to install or configure, but you must have a supported Web browser on the computer. To gain access to the EWS, type the IP address for the product in the address line of the browser. (To find the IP address, print a configuration page. For more information about printing a configuration page, see Information pages on page 50.)

NOTE: For Macintosh operating systems, you can use the EWS over a USB connection after installing the Macintosh software included with the product.

Features

The EWS allows you to view product and network status and manage printing functions from a computer. With the EWS, you can complete the following tasks:

- View product status information
- Determine the remaining life on all supplies and order new ones
- View and change part of the product configuration
- View and print some internal pages
- Select the language in which to display the EWS pages and control panel messages
- View and change network configuration
- Set, change, or clear the product security password (see Turn on password protection from the control panel on page 63).
- Enable/disable the photo card slot on the product from the print tab
- Set fax receive and phone book settings.
- Set default copy and print settings.

NOTE: Changing network settings in the EWS might disable some of product software or features.

Use HP Web Jetadmin software

HP Web Jetadmin is a Web-based software solution for remotely installing, monitoring, and troubleshooting network-connected peripherals. The intuitive browser interface simplifies cross-platform management of a wide range of devices, including HP and non-HP devices. Management is proactive, allowing network administrators the ability to resolve issues before users are affected. Download this free, enhanced-management software at www.hp.com/go/webjetadmin_software.

To obtain plug-ins to HP Web Jetadmin, click **plug-ins**, and then click the **download** link that is next to the name of the plug-in that you want. The HP Web Jetadmin software can automatically notify you when new plug-ins are available. On the **Product Update** page, follow the directions to automatically connect to the HP Web site.

If installed on a host server, HP Web Jetadmin is available to any client through a supported Web browser, such as Microsoft Internet Explorer 6.0 for Windows or Netscape Navigator 7.1 for Linux. Browse to the HP Web Jetadmin host.

NOTE: Browsers must be Java-enabled. Browsing from an Apple PC is not supported.

Security features

The product includes a password feature that restricts access to setup features while allowing basic functions to continue. A single system password can be set from the EWS or the control panel.

Private receive can be used to store faxes on the product until you are at the product to print them.

Turn on password protection using the embedded Web server

Use the EWS to set the password.

1. Open the EWS, and then click the **System** tab.
2. Click **Password**.
3. In the **Password** box, type the password you want to set, and then in the **Confirm password** box, type the same password again to confirm your choice.
4. Click **Apply** to save the password.

Turn on password protection from the control panel

To set up the product security password, complete the following steps:

1. On the control panel, press Setup.
2. Use the arrow buttons to select **System setup**, and then press OK.
3. Use the arrow buttons to select **Product security**, and then press OK.
4. Use the arrow buttons to select **On**, and then press OK.
5. Use the alphanumeric buttons to enter the product password, and then press OK.
6. To confirm the product password, use the alphanumeric buttons to re-enter the password, and then press OK.

Turn on private receive feature

The password-protection feature must be turned on before the private-receive feature can be activated.

1. On the control panel, press Setup.
2. Use the arrow buttons to select **Fax setup**, and then press OK.
3. Use the arrow buttons to select **Advanced setup**, and then press OK.
4. Use the arrow buttons to select **Private receive**, and then press OK.
5. Use the arrow buttons to select **On**, and then press OK.
6. Use the alphanumeric buttons to enter the product security password, and then press OK.
7. To confirm the product security password, use the alphanumeric buttons to re-enter the product security password, and then press OK.

Manage supplies

Check and order supplies

You can check the supplies status by using the product control panel, printing a supplies status page, or viewing HP ToolboxFX. Hewlett-Packard recommends that you place an order for a replacement print cartridge when Low message for a print cartridge first appears. Use a new, authentic HP print cartridge to obtain the following types of supplies information:

- Amount of cartridge life remaining
- Approximate number of pages remaining
- Number of pages printed
- Other supplies information

NOTE: If the product is connected to the network, you can set HP ToolboxFX to notify you by e-mail when a print cartridge is low. If the product is directly connected to a computer, you can set HP ToolboxFX to notify you when supplies are low.

Check supplies status by using the control panel

Do one of the following:

- Check the product control panel, which indicates when a print cartridge is low or empty. The control panel also indicates when a non-HP print cartridge is first installed.
- Print a supplies status page, and then check the supplies levels on the page.

If the supplies levels are low, you can order supplies through a local HP dealer, by telephone, or online. See Order parts, accessories, and supplies on page 328 for part numbers. Go to www.hp.com/go/ljsupplies to order online.

Check supplies status by using HP ToolboxFX

You can configure HP ToolboxFX to notify you when the supplies are low. Choose to receive alerts by e-mail or as a pop-up message or taskbar icon.

Store supplies

Follow these guidelines for storing print cartridges:

- Do not remove the print cartridge from its package until you are ready to use it.

  CAUTION: To prevent damage, do not expose the print cartridge to light for more than a few minutes.

- See Environmental specifications on page 378 for operating and storage temperature ranges.
- Store the supply in a horizontal position.
- Store the supply in a dark, dry location away from heat and magnetic sources.

HP policy on non-HP supplies

Hewlett-Packard Company cannot recommend the use of non-HP supplies, either new or remanufactured. Because they are not HP products, HP cannot influence their design or control their quality. Service or repairs required as a result of using a non-HP supply will *not* be covered under the warranty.

HP fraud hotline

Call the HP fraud hotline if the product or HP ToolboxFX indicates that the print cartridge is not an HP print cartridge and you think that it is genuine. HP will help determine if the product is genuine and take steps to resolve the problem.

The print cartridge might not be a genuine HP one if you notice the following issues:

- You are experiencing a large number of problems with the print cartridge.
- The print cartridge does not look like it usually does (for example, the pull tab or the box is different).

In the United States, call toll-free: 1-877-219-3183.

Outside the United States, you can call collect. Dial the operator and ask to place a collect call to this telephone number: 1-770-263-4745. If you do not speak English, a representative at the HP fraud hotline who speaks your language will assist you. Or, if someone who speaks your language is not available, a language line interpreter will connect approximately one minute after the beginning of the call. The language line interpreter is a service that will translate between you and the representative for the HP fraud hotline.

Recycle supplies

To install a new HP print cartridge, follow the instructions that are included in the box that contains the new supply, or see the getting started guide.

To recycle supplies, place the used supply in the box in which the new supply arrived. Use the enclosed return label to send the used supply to HP for recycling. For complete information, see the recycling guide that is included with each new HP supply item.

Replace supplies

Print cartridge

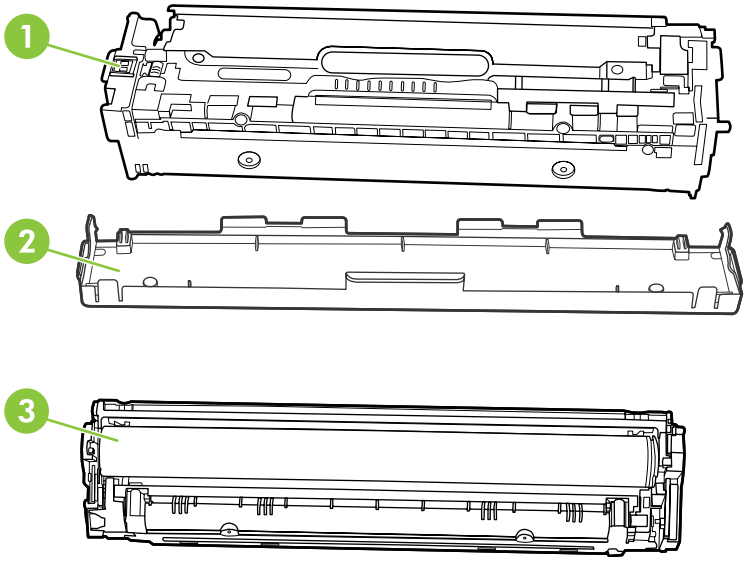

1	Cartridge E-label
2	Plastic shield
3	Imaging Drum. Do not touch the imaging drum on the bottom of the print cartridge. Fingerprints on the imaging drum can cause print-quality problems.

1. Open the front door.

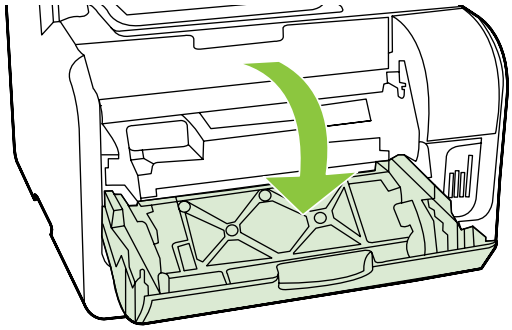

2. Pull out the print-cartridge drawer.

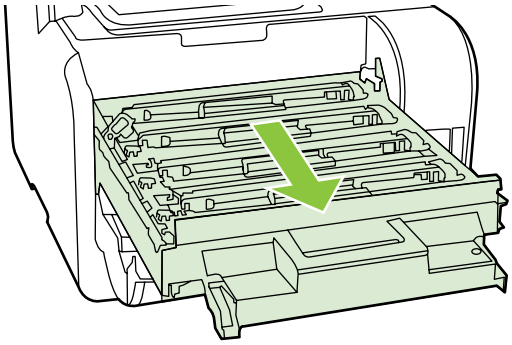

3. Grasp the handle on the old print cartridge and then pull the cartridge straight up to remove it.

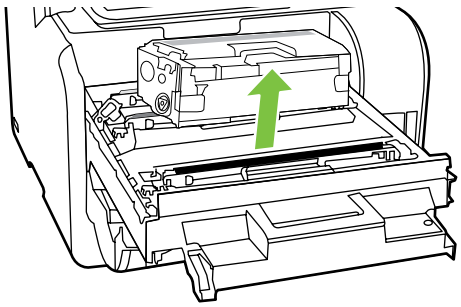

4. Remove the new print cartridge from the packaging.

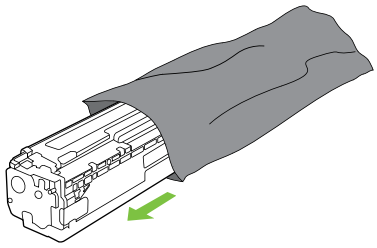

5. Remove the orange, plastic shield from the bottom of the new print cartridge.

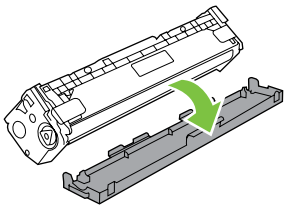

△ **CAUTION:** Do not touch the imaging drum on the bottom of the print cartridge. Fingerprints on the imaging drum can cause print-quality problems.

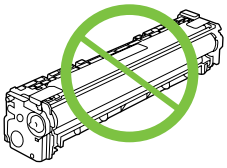

6. Insert the new print cartridge into the product.

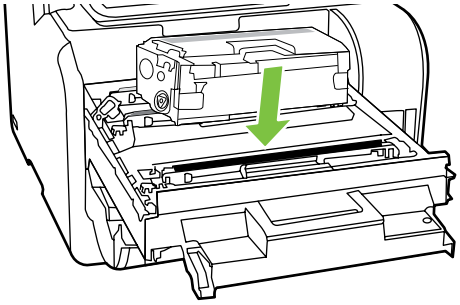

7. Pull the tab on the left side of the print cartridge straight up to completely remove the sealing tape. Discard the sealing tape.

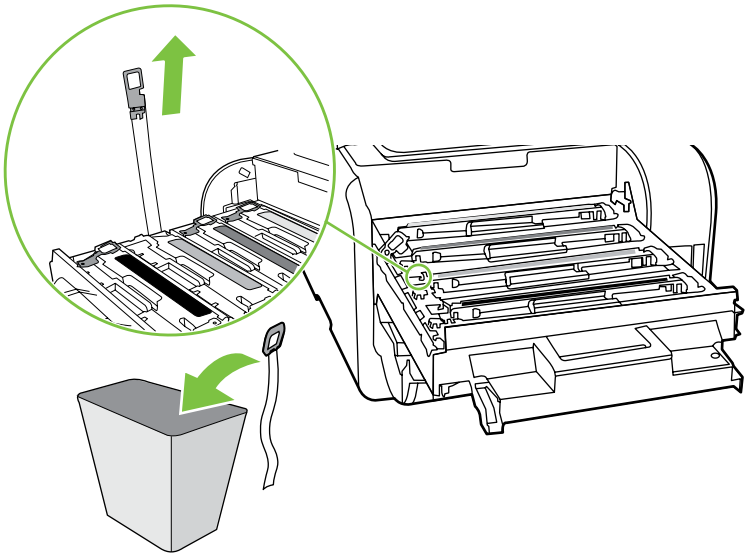

8. Close the print-cartridge drawer.

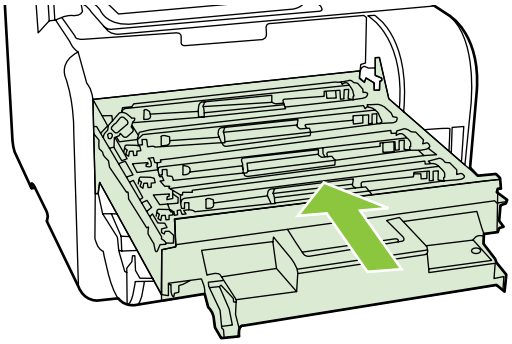

9. Close the front door.

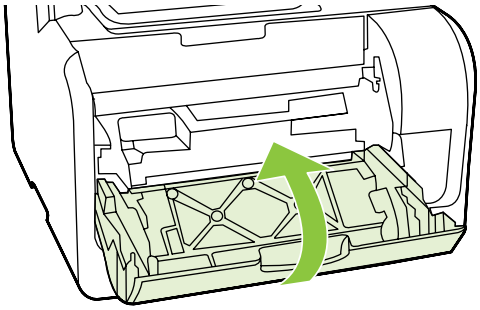

10. Place the old print cartridge in the box for the new print cartridge. Follow the recycling instructions that are included in the box.

△ **CAUTION:** If toner gets on any clothing, wipe it off with a dry cloth and wash the clothing in cold water. *Hot water sets toner into the fabric.*

Memory DIMMs

Information

The product comes with 160 MB of RAM. The product also has one DIMM slot that can be used to add a 64 MB or 128 MB DIMM. Some available RAM might be used by the product to complete jobs.

Install a memory DIMM

△ **CAUTION:** Handling a DIMM without wearing a grounded, antistatic device might damage the DIMM. Touch any metal part of the product or other grounded metal before touching the DIMM.

1. Use the power switch to turn off the product, and then unplug all of the cables and cords connected to the product.

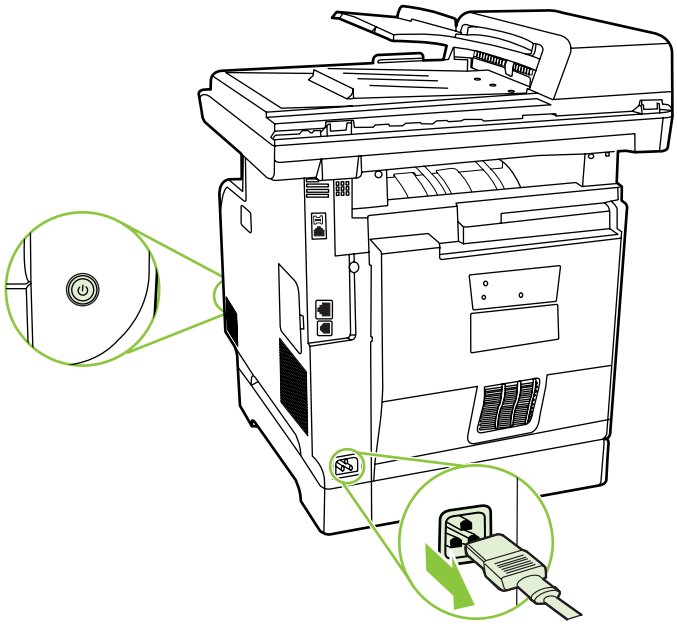

2. Open the DIMM door.

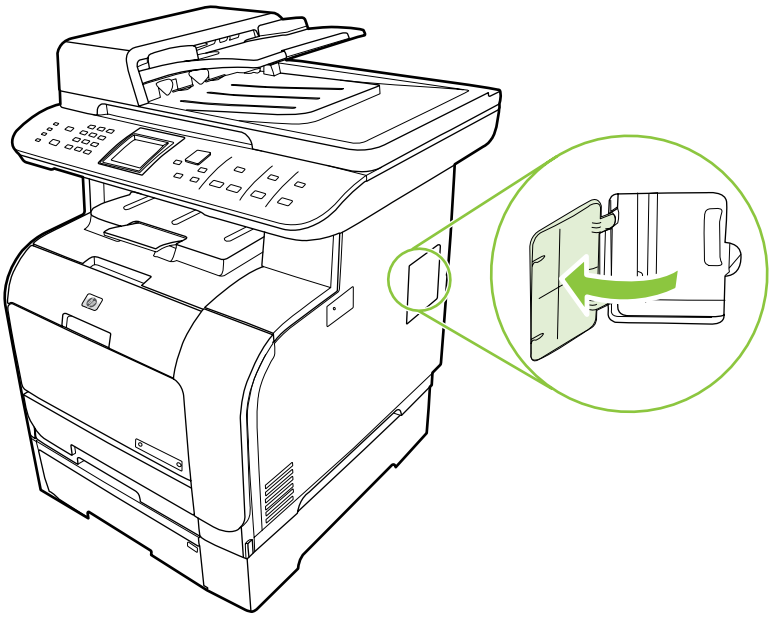

3. Remove the DIMM from the antistatic bag it came in, grasping the DIMM on the top edge.

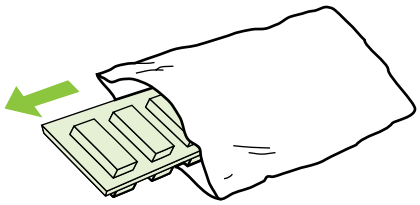

4. With the gold contacts facing upward, insert the DIMM in the DIMM seat and press the DIMM body in until the metal retaining pins click.

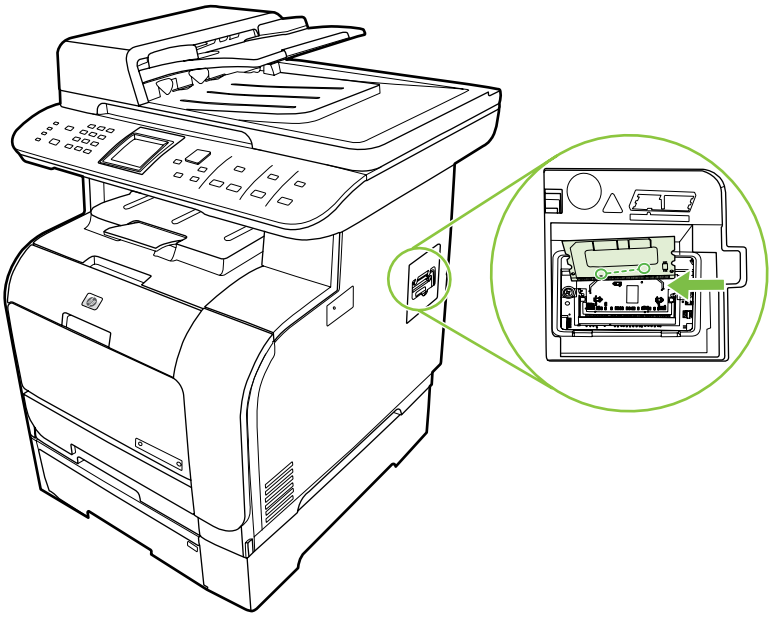

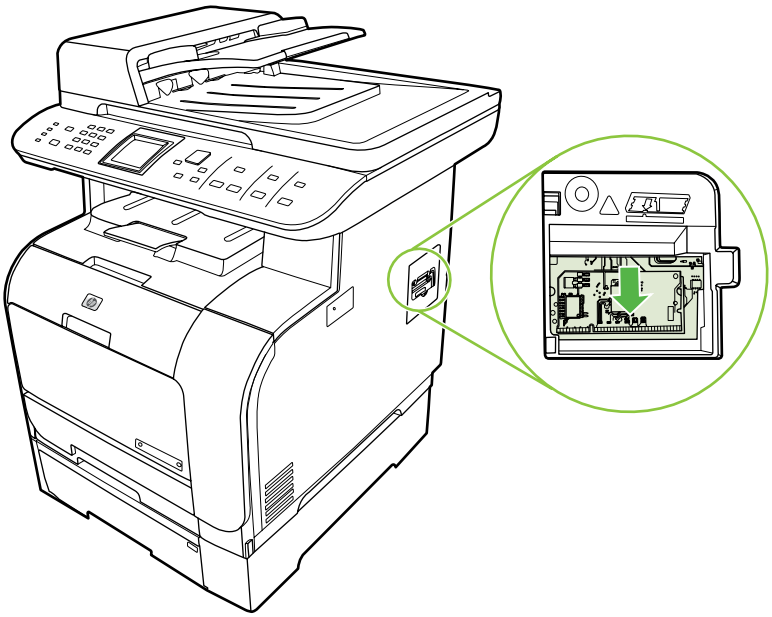

5. Close the DIMM door.

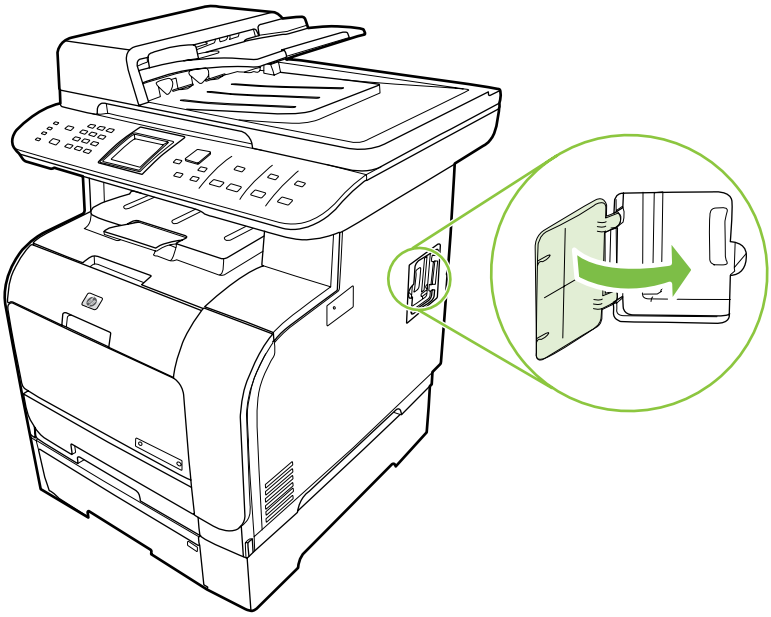

6. Reconnect all cables and cords, and then use the power switch to turn on the product.

7. Print a configuration page, and then verify that the Memory section shows the new memory amount. See Information pages on page 50.

Clean the product

Clean the paper path

During the printing process, paper, toner, and dust particles can accumulate inside the product. Over time, this buildup can cause print-quality problems such as toner specks or smearing. This product has a cleaning mode that can correct and prevent these types of problems.

Specks

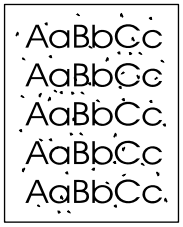

Smearing

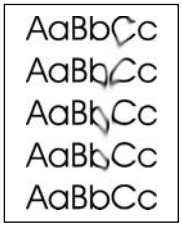

Clean the paper path from HP ToolboxFX

Use HP ToolboxFX to clean the paper path. This is the recommended cleaning method. If you do not have access to HP ToolboxFX, use the process from the control panel.

1. Make sure that the product is turned on and in the Ready state, and that media is loaded in Tray 1 or Tray 2.
2. Open HP ToolboxFX, click the product, and then click the **System Settings** tab.
3. Click the **Service** tab, and then click **Start**.

   A page feeds through the product slowly. Discard the page when the process is completed.

Clean the paper path from the product control panel

If you do not have access to HP ToolboxFX, you can print and use a cleaning page from the product control panel.

1. Press Setup.
2. Use the arrow buttons to highlight the **Service** menu, and then press OK.
3. Use the arrow buttons to highlight **Cleaning mode**, and then press OK.
4. Load plain letter or A4 paper when you are prompted.
5. Press OK again to confirm and begin the cleaning process.

   A page feeds through the product slowly. Discard the page when the process is completed.

Clean the automatic document feeder (ADF) pickup roller assembly

If the ADF has trouble feeding documents, clean the ADF pickup roller assembly.

1. Turn off the product and unplug the power cord.

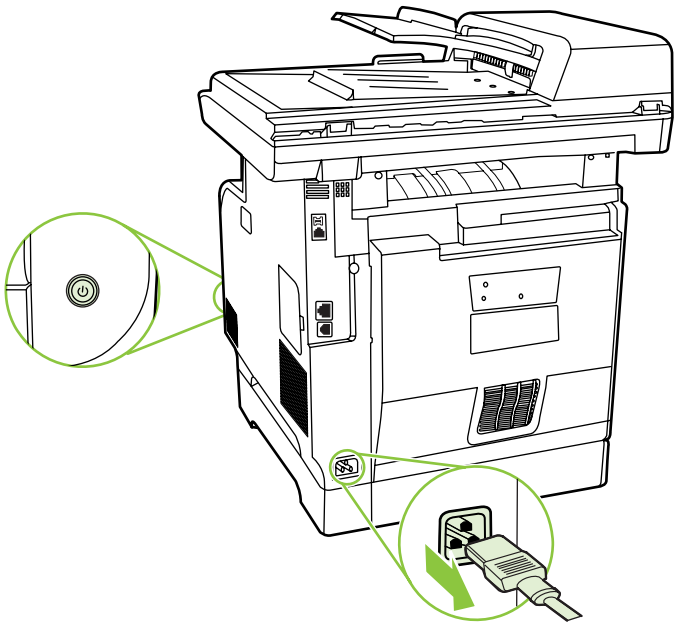

2. Open the ADF cover.

3. Rotate the assembly upward. Wipe it clean and rotate the rollers until the assembly is clean.

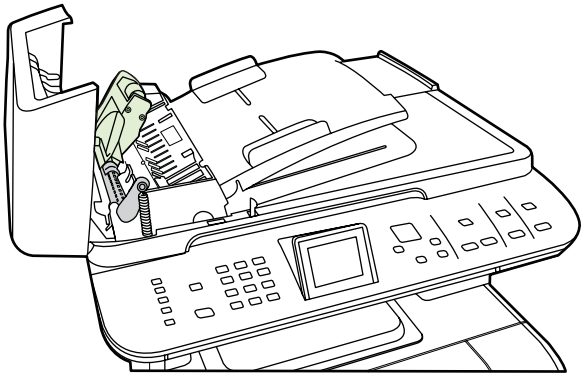

4. Lower the green lever assembly and close the ADF cover.

NOTE: If you are experiencing jams in the ADF, contact HP. See www.hp.com/support/CM2320series or the support flyer that came in the product box.

5. Plug in the product, and then turn on the product.

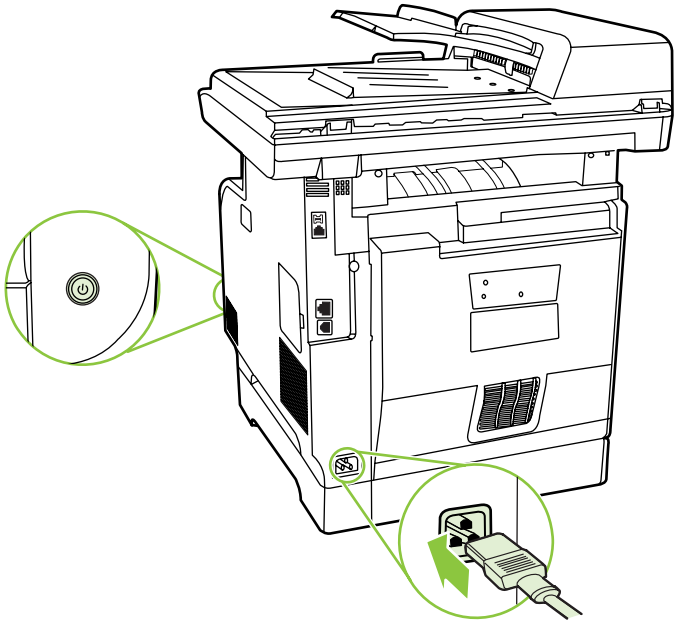

Clean the lid backing

Minor debris can accumulate on the white document lid backing that is located underneath the product lid.

1. Turn off the product, unplug the power cord, and raise the lid.

2. Clean the white document lid backing by using a soft cloth or sponge that has been moistened with a mild soap and warm water. Wash the backing gently to loosen debris; do not scrub the backing.

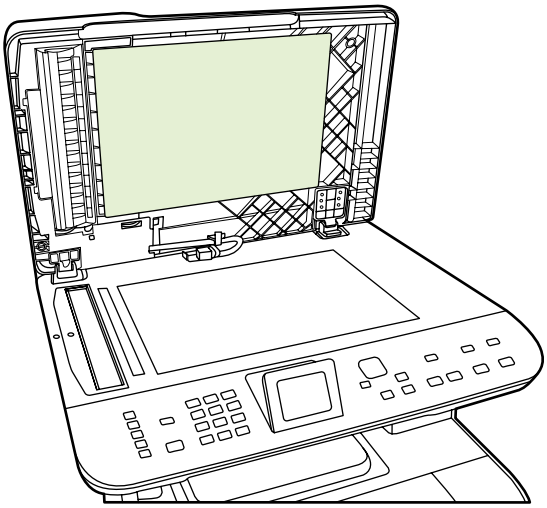

3. Also, clean the scanner strip next to the ADF scanner glass.

4. Dry the backing by using a chamois or soft cloth.

△ **CAUTION:** Do not use paper-based wipes because they might scratch the backing.

5. If this does not clean the backing well enough, repeat the previous steps and use isopropyl alcohol to dampen the cloth or sponge, and then wipe the backing thoroughly with a damp cloth to remove any residual alcohol.

Clean the scanner glass

Dirty glass, from fingerprints, smudges, hair, and so on, slows down performance and affects the accuracy of special features such as fit-to-page and copy.

NOTE: If streaks or other defects appear only on copies produced using the automatic document feeder (ADF), clean the scanner strip (step 3). It is not necessary to clean the scanner glass.

1. Turn off the product, unplug the power cord from the electrical socket, and raise the lid.

2. Clean the glass by using a soft, lint-free cloth or sponge that has been moistened with nonabrasive glass cleaner.

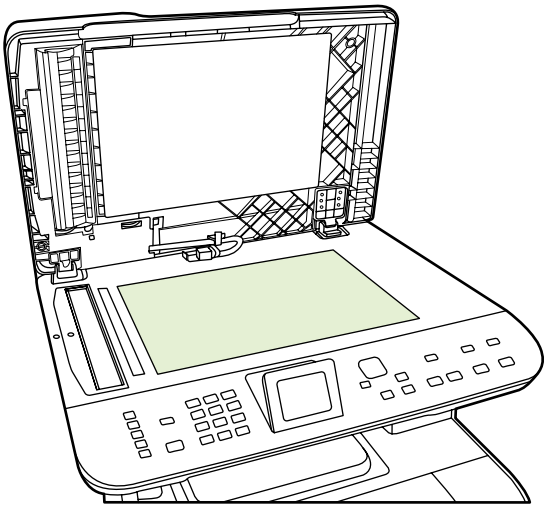

△ **CAUTION:** Do not use abrasives, acetone, benzene, ammonia, ethyl alcohol, or carbon tetrachloride on any part of the product; these can damage the product. Do not place liquids directly on the glass. They might seep under it and damage the product.

3. Clean the scanner strip by using a soft, lint-free cloth or sponge that has been moistened with nonabrasive glass cleaner..

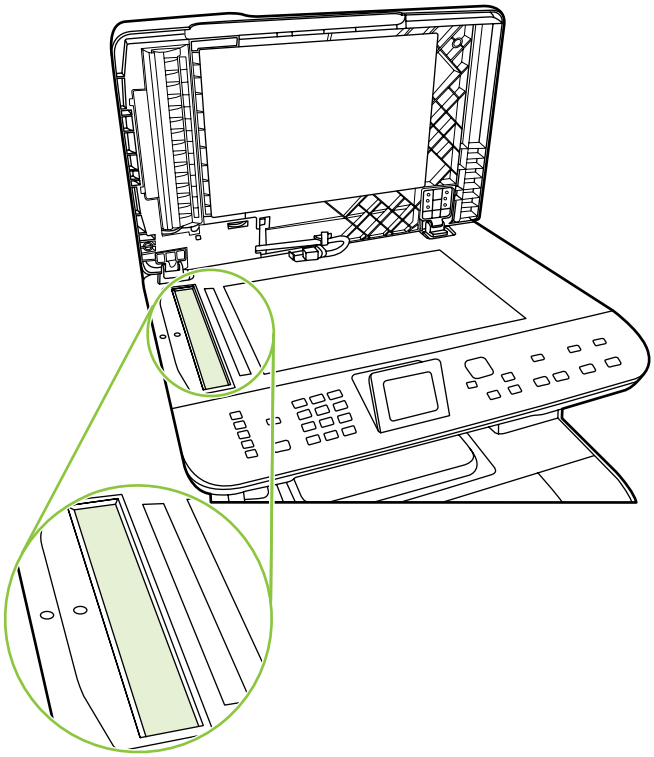

4. To prevent spotting, dry the glass by using a chamois or cellulose sponge.

Clean the exterior

Use a soft, damp, lint-free cloth to wipe dust, smudges, and stains off of the exterior of the product.

Firmware updates

Firmware updates and installation instructions for this product are available at www.hp.com/support/CM2320series. Click **Downloads and drivers**, click the operating system, and then select the firmware download for the product.

NOTE: Interrupting the firmware download can cause the product to cease operating. If you experience a firmware update error, see Recover from a corrupted firmware download on page 79.

Recover from a corrupted firmware download

This process does not require a service call. It can be performed by the customer.

If the product power is interrupted during either the **Erasing** or **Programming** phases of the firmware download, the product will be unusable until the steps below are performed. If power interruption occurs, the message **ready 2 Download** appears on the control panel.

NOTE: The product must be attached to the computer via USB, regardless of the current connection method.

NOTE: The instructions below are for the Microsoft Windows operating system.

If the product power is interrupted during the **Erasing** or **Programming** phase, the message **ready 2 Download** appears, and the Ready and Attention LEDs remain unlit after the product is powered back on. On the computer, the update tool will not indicate that a failure occurred during the update. The update tool will show that the download completed and might even have a yellow smiley face at the end of the progress bar. This is due to the lack of two-way communication between the computer and the product once the download begins.

1. Close the firmware update tool on the computer if it is still active on the screen, and then turn off the product.
2. If the product is on a network, connect a USB cable (2 meters or less) from the product to an open port on the computer. HP recommends that this be a direct connection instead of through a hub.
3. Turn on the product, and then wait for the message **ready 2 Download** to appear.
4. On the computer, cancel any alerts about a new device being connected.
5. On the computer, open the Printers and Faxes control panel.
6. Right-click the printer driver for the product model that is being updated, and then click **Properties**.
7. In the Properties dialog box, click the **Ports** tab.
8. Note the name of the port that the product is currently connected to for use later when reconnecting at the end of this process.
9. Click the check box next to **USB001**. If USB001 is already connected to another USB device, click **USBXXX** where “XXX” is the highest-numbered USB device that has a description of “Virtual printer port for USB”. Using the scroll bars on the right side of the window might be necessary, depending on the number of devices installed.

10. Click **OK** to accept the change and apply the settings.
11. Restart the firmware update tool on the computer, and then select the same product that was just created.
12. Start the firmware download.
13. Verify that the control panel display shows **Erasing** and then **Programming**, indicating that the update process has begun. Do not interrupt the firmware update process.
14. The product should momentarily show the message **Complete**. Turn the product off and then back on. The product will not automatically reboot.
15. When the product reboots, on the computer, cancel any alerts about a new device being connected.
16. Print a configuration page to verify that the update occurred.
17. Return to the Printers and Faxes dialog box, right-click the printer driver for the product model that is being updated, and then click **Properties**.
18. In the Properties dialog box, click the **Ports** tab.
19. Click the check box next to the previous port to which the product was connected before the update began.
20. Click **OK** to accept the change and apply the settings.
21. If the product was previously connected via USB, the process is complete. If the product was network-connected, disconnect the USB cable, and then reconnect the product to the network cable.

NOTE: In rare instances, the print driver software might need to be uninstalled and reinstalled.

5 Theory of operation

This chapter presents an overview of the major components of the product, and includes a detailed discussion of the image-formation system.

Basic operation

Major product systems

The product includes the following systems:

- Engine control system
- Laser/scanner system
- Image-formation system
- Pickup-and-feed system

Figure 5-1 Product systems

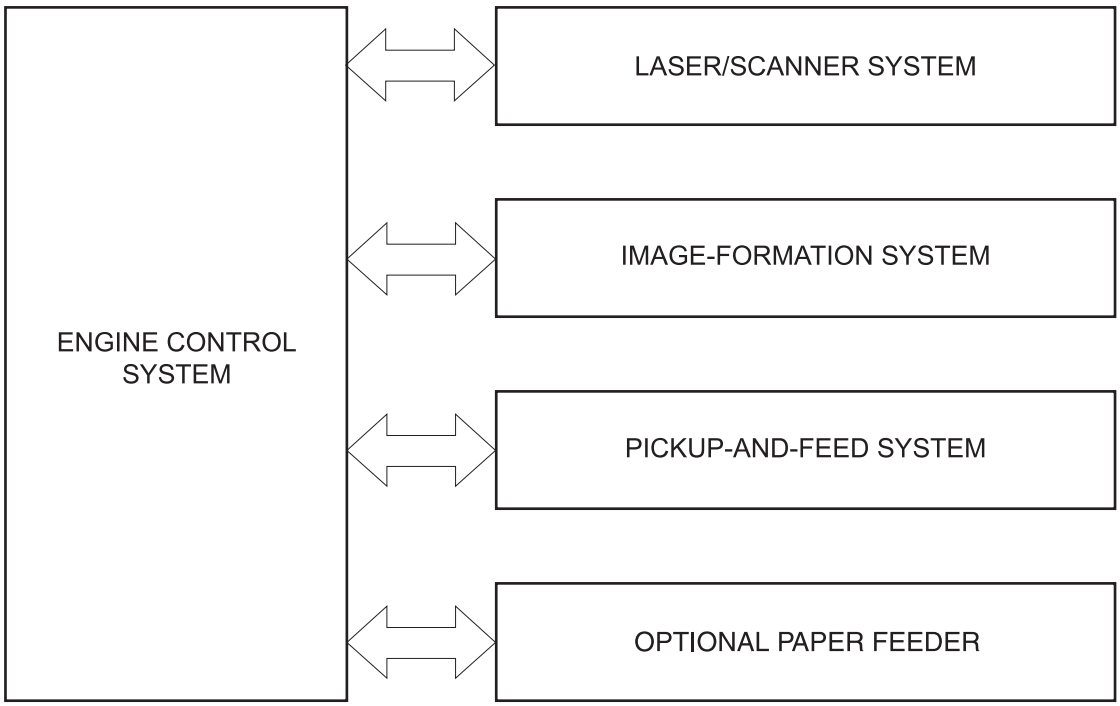

Product components

Figure 5-2 Product components

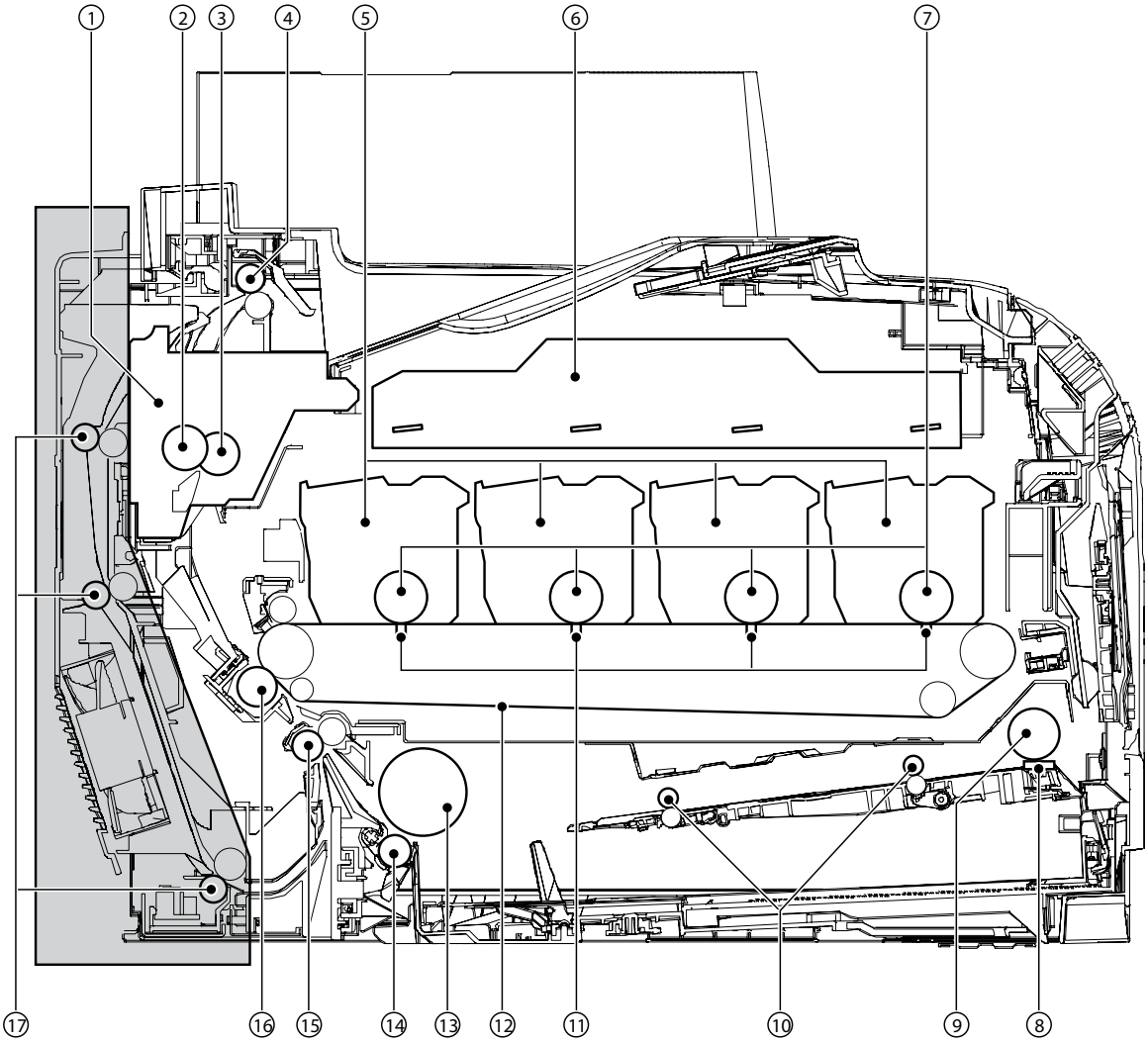

Item	Description	Item	Description
1	Fuser unit	10	Multipurpose tray (Tray 1) feed roller
2	Pressure roller	11	Primary transfer pad
3	Fusing sleeve	12	Intermediate transfer belt (ITB)
4	Delivery roller	13	Cassette (Tray 2) pickup roller
5	Print cartridge	14	Cassette (Tray 2) separation roller
6	Laser/scanner unit	15	Registration roller
7	Photosensitive drum	16	Secondary transfer roller
8	Multipurpose tray (Tray 1) separation pad	17	Duplex feed roller (duplex models only)
9	Multipurpose tray (Tray 1) pickup roller		

Sequence of operation

Table 5-1 Sequence of operation

Period	Duration	Operation
WAIT	From the time the power is turned on, the door is closed, or the Sleep mode is released until the product gets ready for a print operation.	This period brings the product to printable condition. During this period the product performs the following actions. • Detects the pressure roller pressurized status • Detects the presence of each cartridge and unit • Determines the home position of the development unit • Cleans the ITB • Completes any required calibration, such as color misregistration and image stabilization control
STBY (Standby period)	From the end of the WAIT or LSTR period until either the print command is received from the formatter or the power is turned off.	This period maintains the product in printable condition. During this period the product performs the following actions. • Enters sleep mode when the formatter sends a sleep command • Completes any required calibration, such as color misregistration and image stabilization control, when the formatter sends those commands
INTR (Initial rotation)	From the time the print command is received from the formatter during the STBY period until the temperature of the fuser unit reaches the targeted temperature.	The product starts each high-voltage bias, laser-scanner unit, and fuser unit for in preparation for a print operation.
PRINT	From the end of INTR period until the last sheet of media completes the fusing operation.	The product forms the image on the photosensitive drum based on the video signals from the formatter, and then transfers and fuses the toner image to the print media. The product performs color misregistration control and image stabilization control at a specified print interval after the product is turned on.
LSTR (Last rotation)	From the end of the PRINT period until the motors stop rotating.	The product moves the last printed sheet out of the product, and then it stops the laser-scanner unit operation and the high-voltage biases. The product enters the INTR period as soon as the LSTR period is completed, if the formatter sends another print command.

Engine control system

The engine control system coordinates all product functions and drives the other three systems.

The engine control system contains the DC controller, high-voltage power supply PCA, and power supply unit.

Figure 5-3 Engine control system components

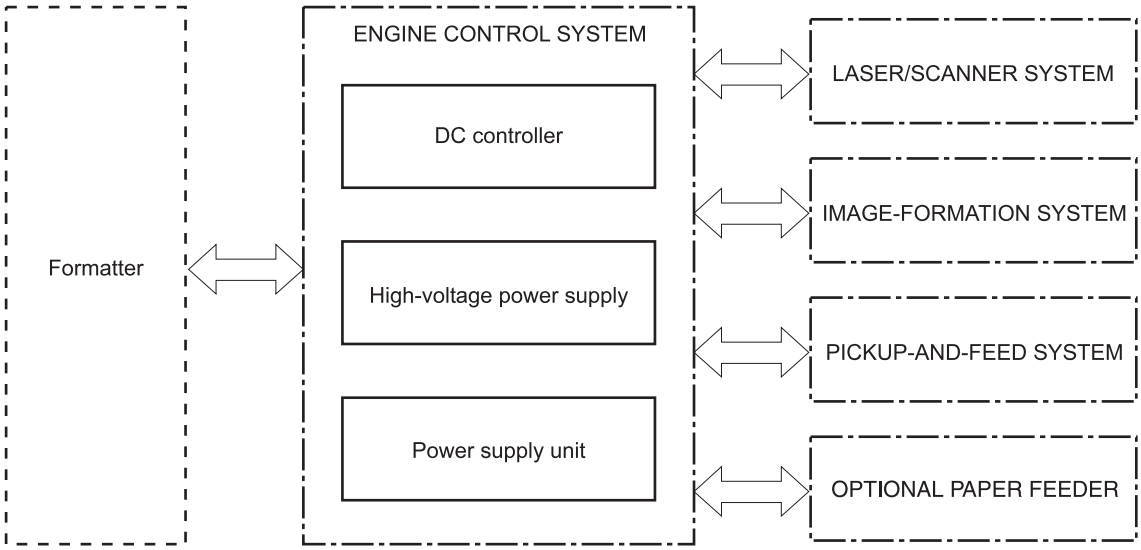

DC controller

The DC controller controls the product operational sequence.

Figure 5-4 DC controller circuit diagram

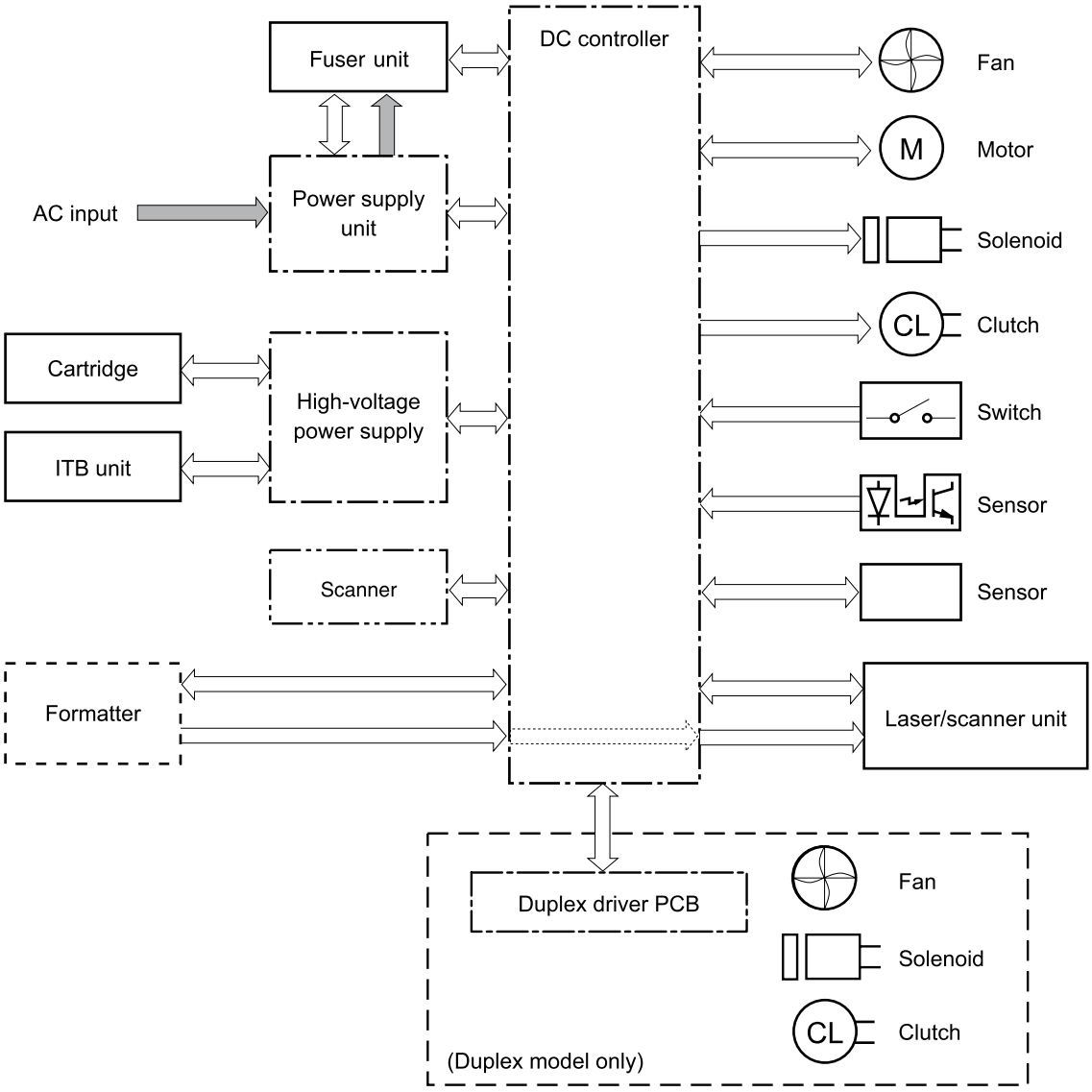

Power supply

The power supply converts AC power from the power receptacle into DC power to cover the DC loads, and it controls the fuser heater temperature.

Figure 5-5 Power supply

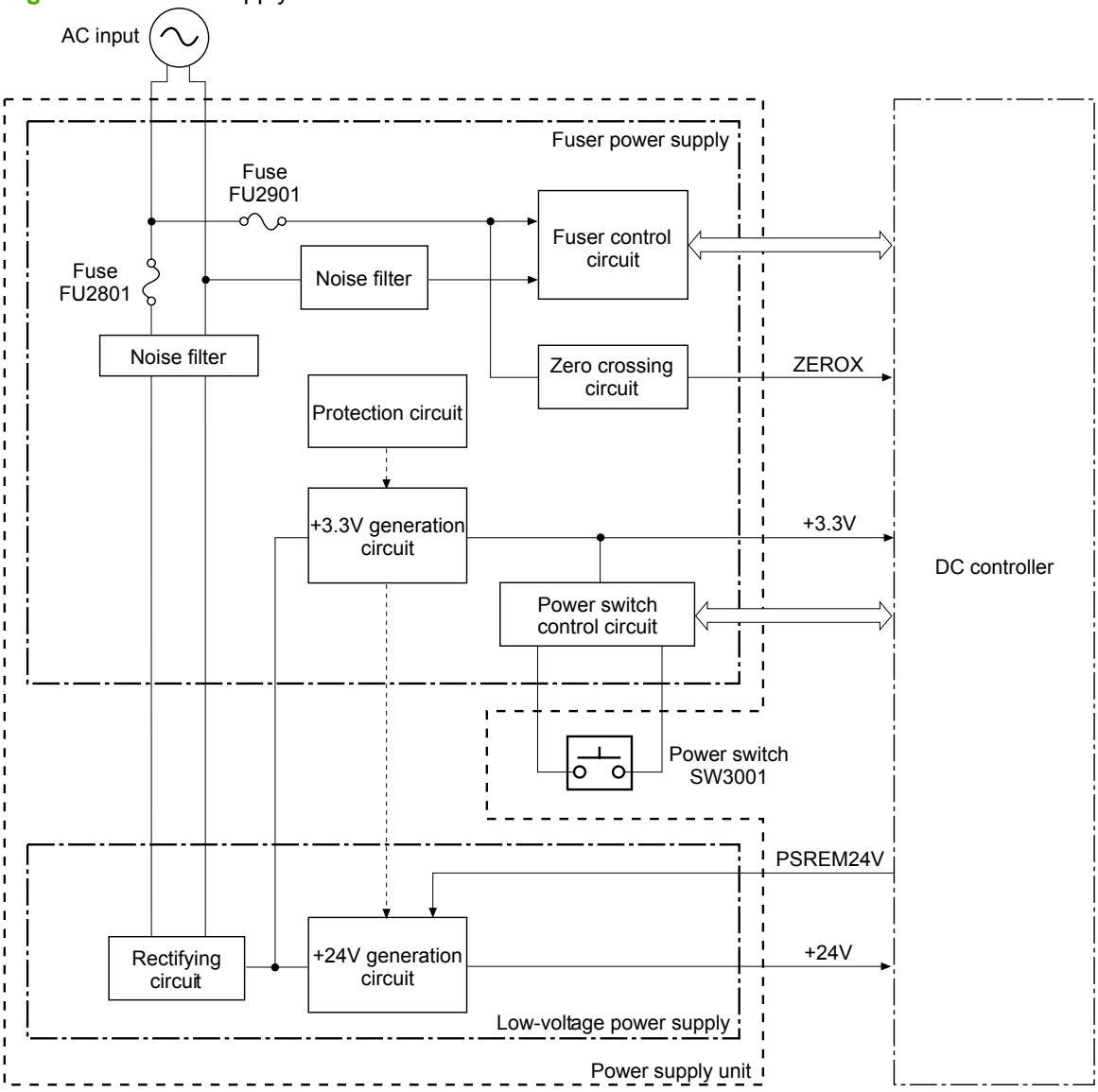

Protective function

The power supply unit has a protective function against overcurrent and overvoltage to prevent failures in the power supply circuit. If an overcurrent or overvoltage instance occurs, the system automatically cuts off the output voltage.

If the DC voltage is not being supplied from the power supply unit, the protective function might be running. If that is the case, turn off the power switch and unplug the power cord. Do not plug in the power cord and do not turn the power switch on again until the root cause is found.

In addition, a fuse protects against overcurrent instances. If an overcurrent instance flows into the AC line, the fuse deactivates and cuts off the power distribution.

Power-save mode

The power-save mode reduces product power consumption. When the power supply unit receives the power save (PSREM24V) signal from the DC controller, it stops the power supply from the +24V generation circuit.

Fuser control

The power supply unit controls the temperature in the fuser unit. The product uses an on-demand fusing method.

Figure 5-6 Fuser unit

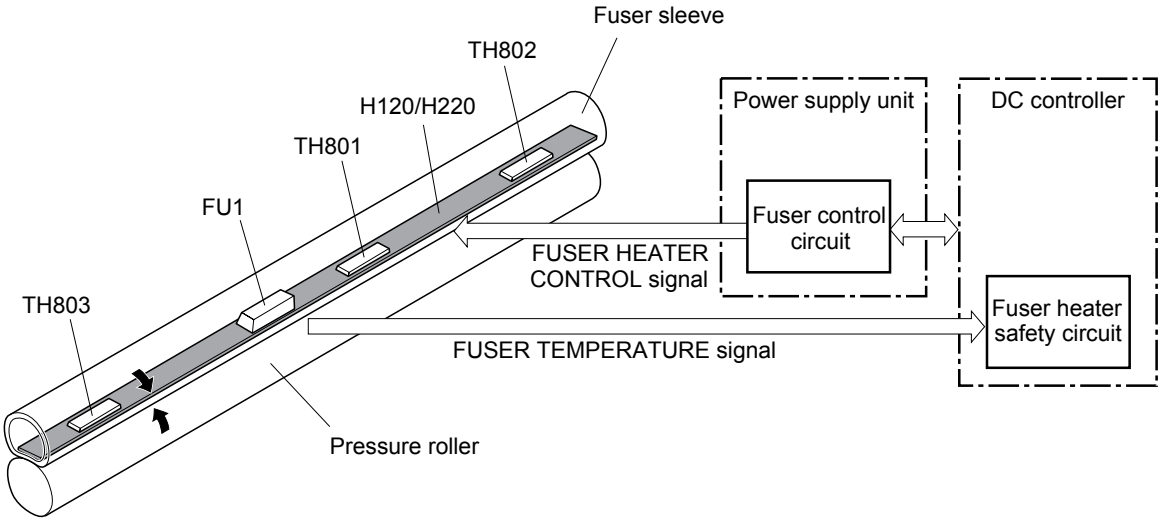

The fuser is composed of the following components.

- Heater (100V model: H120/200V model: H220): Heats the fuser sleeve
- Thermistors
  - Main thermistor (TH801): Detects the center temperature of the fuser heater (contact type)
  - Sub thermistor 1 (TH802): Detects the right side temperature of the fuser heater (contact type)
  - Sub thermistor 2 (TH803): Detects the left side temperature of the fuser heater (contact type)
- Thermal fuse (FU1): Prevents an abnormal temperature rise of the fuser heater

These fuser temperature controls are performed by the fuser control circuit and the fuser heater safety circuit, which receive commands from the DC controller.

Fuser control circuit

The fuser control circuit maintains the temperature of the fuser heater at its targeted temperature.

Figure 5-7 Fuser control circuit

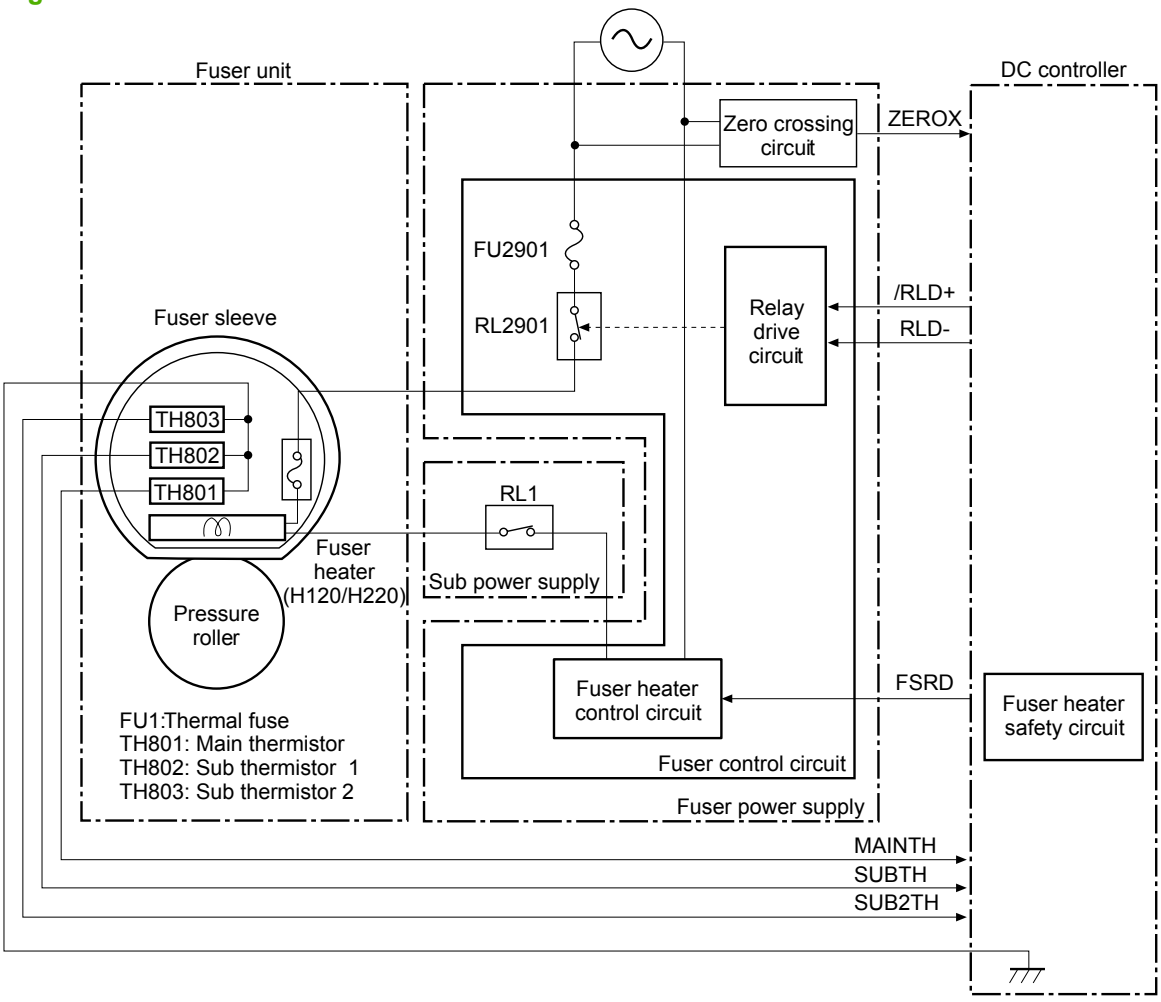

The DC controller monitors the fuser temperature (MAINTH, SUBTH and SUB2TH) signals and sends the fuser heater control (FSRD) signal according to the detected temperature. The fuser heater control circuit controls the fuser heater depending on the signal so that the heater remains at the targeted temperature.

Fuser protective function

The protective function detects an abnormal temperature rise of the fuser and interrupts power supply to the fuser heater. The following protective components prevent an abnormal temperature rise of the fuser heater.

- **DC controller**: The DC controller monitors the detected temperature of the thermistors. It deactivates the fuser heater control signal and releases the relay to interrupt the power supply to the fuser heater under the following conditions.
  - Main thermistor: 253°C (487.4°F) or higher
  - Sub thermistor 1: 273°C (523.4°F) or higher
  - Sub thermistor 2: 273°C (523.4°F) or higher
- **Fuser heater safety circuit**: The fuser heater safety circuit monitors the detected temperature of the thermistors. It releases the relay to interrupt the power supply to the fuser heater under the following conditions.
  - Main thermistor: 320°C (608°F) or higher
  - Sub thermistor 1: 295°C (563°F) or higher
  - Sub thermistor 2: 295°C (563°F) or higher
- **Thermal fuse**: The thermal fuse blows to interrupt power supply to the fuser heater if the thermal fuse temperature reaches 228°C (442°F) or higher.

Fuser failure detection

The DC controller determines a fuser unit failure, deactivates the fuser heater control signal, releases the relay to interrupt power supply to the fuser heater, and then notifies the formatter of a failure state when it encounters the following conditions.

- Start-up failure conditions
  - The main thermistor temperature does not reach 50°C (122°F) within a specified period of heater startup during the wait period.
  - The main thermistor temperature does not reach the targeted temperature within a specified period after the temperature once reaches 50°C (122°F) from the heater startup during the wait period.
  - The main thermistor temperature does not reach the targeted temperature within a specified period under the heater temperature control during the initial rotation period.
- Abnormal low temperature conditions
  - The main thermistor temperature remains at 100°C (212°F) or lower for a specified period under the heater temperature control during the print period.

- Abnormal high temperature conditions
  - The main thermistor temperature remains at 253°C (487°F) or higher for a specified period.
  - The temperature of either one of the sub thermistors remains at 273°C (523°F) or higher for a specified period.
- Fuser heater drive circuit failure
  - The specified count of the zero crossing signal is not detected within a specified period after the product is turned on.
  - The frequency is out of the specified range (40 to 70 Hz).

High-voltage power supply

The DC controller controls the high-voltage power supply to generate high-voltage biases. The high-voltage power supply generates the high-voltage biases that are applied to the primary charging roller, developing roller, primary transfer pad, secondary transfer roller, and ITB cleaning unit.

Figure 5-8 High-voltage power supply

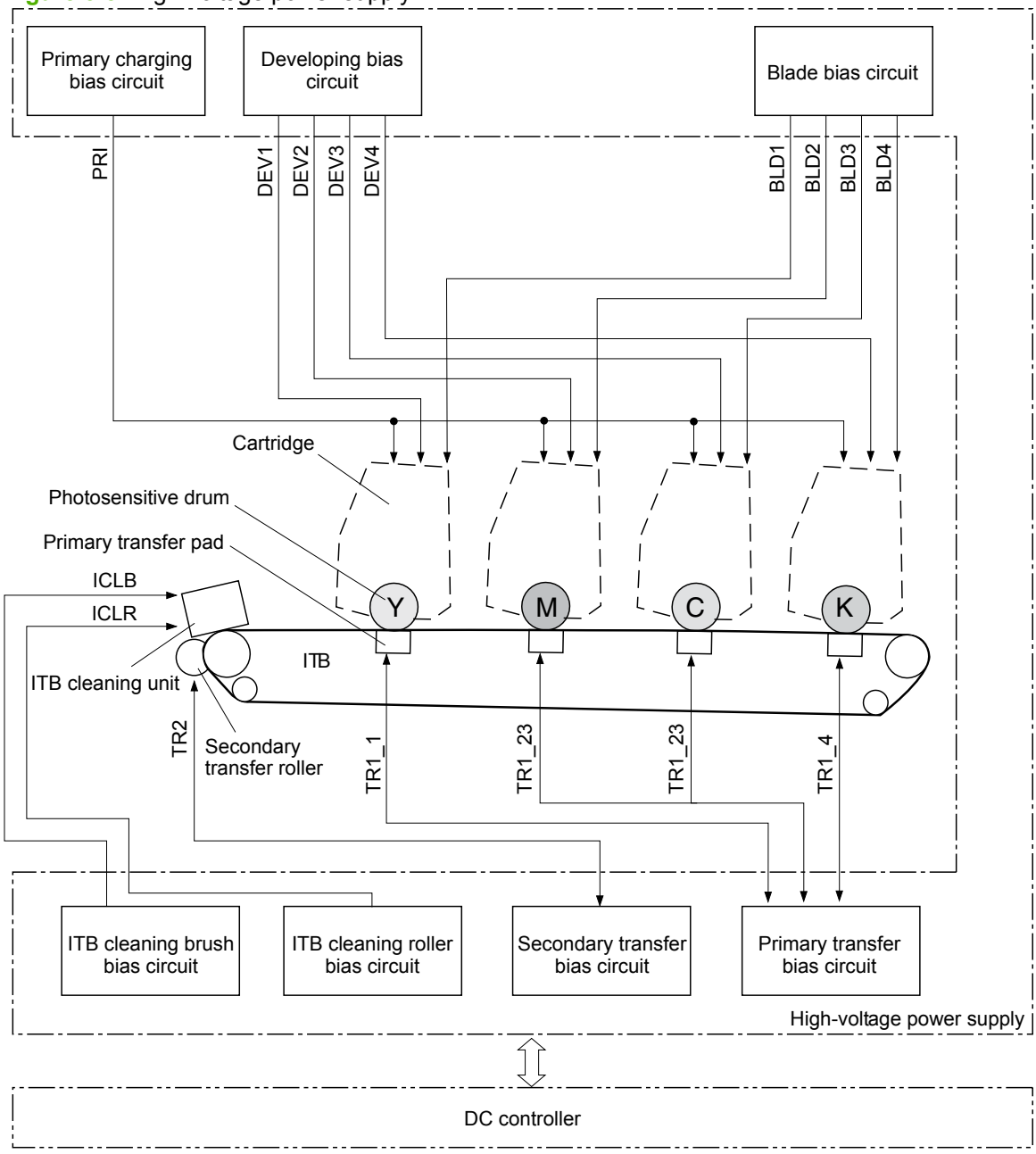

Laser/scanner system

The formatter sends video signals to the DC controller, which controls the laser/scanner. When the laser/scanner system receives those signals, it converts them to latent images on the photosensitive drum.

Figure 5-9 Laser/scanner system

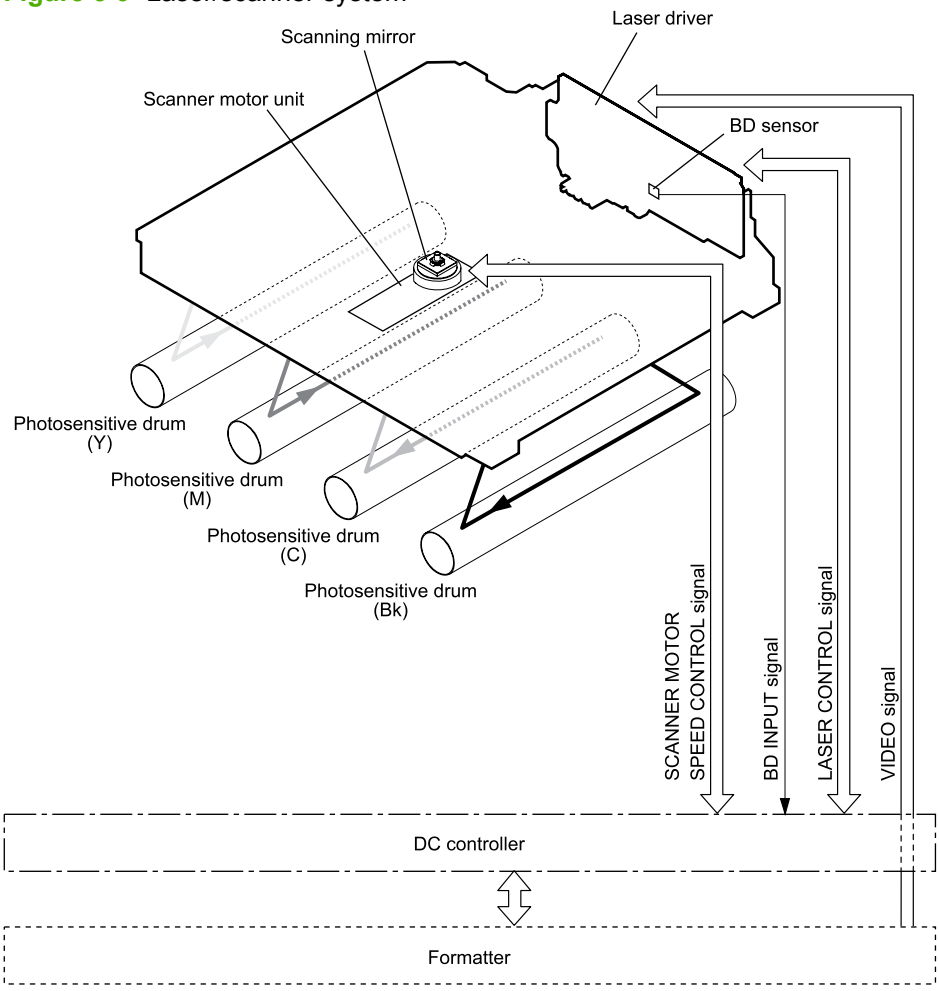

Laser failure detection

The optical unit failure detection sensor manages the laser/scanner unit failure-detection functions. The DC controller identifies the laser/scanner unit failure and notifies the formatter if the laser/scanner unit encounters the following conditions:

- Scanner motor failure
- BD failure

Image-formation system

The image-formation system forms a toner image on media. The product includes four print cartridges that contain the toner that is used to create the image on the media. Toner is applied in the following order, using only the colors necessary for a specific image: yellow (Y), magenta (M), cyan (C), and black (Bk).

The following items are the main components of the image-formation system.

- Print cartridges
- ITB
- Laser scanner
- Fuser

The DC controller controls the laser/scanner unit and the high-voltage power unit to form the toner image on the ITB according to the video signals, and then to transfer and fuse the image on the media.

Figure 5-10 Image-formation system

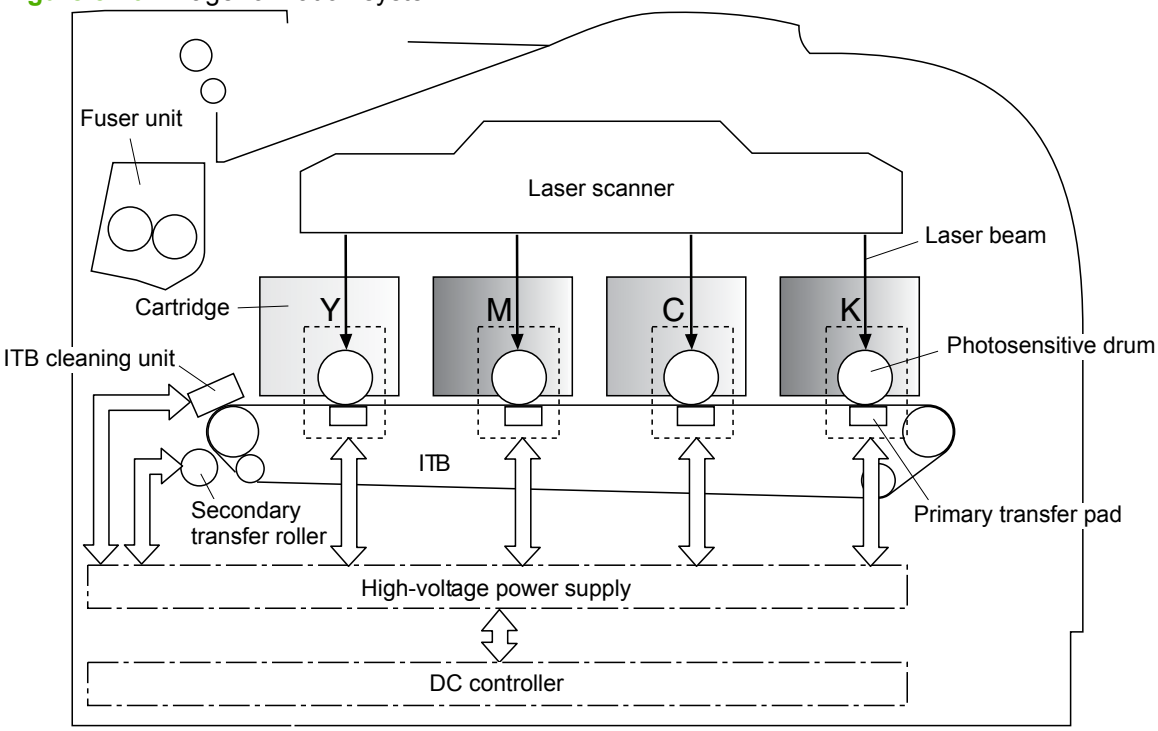

Image-formation process

Laser printing requires the interaction of several different technologies including electronics, optics, and electrographics to provide a printed page. Each process functions independently and must be coordinated with the other processes. Image formation consists of the following processes:

- Latent-image formation
  - Primary charging
  - Laser beam exposure
- Development
- Transfer
  - Primary transfer
  - Secondary transfer
  - Separation
- Fuser
- ITB cleaning
- Drum cleaning

These processes are divided into nine steps, which are shown in Figure 5-11 Image-formation process on page 95 and described in the following sections.

Figure 5-11 Image-formation process

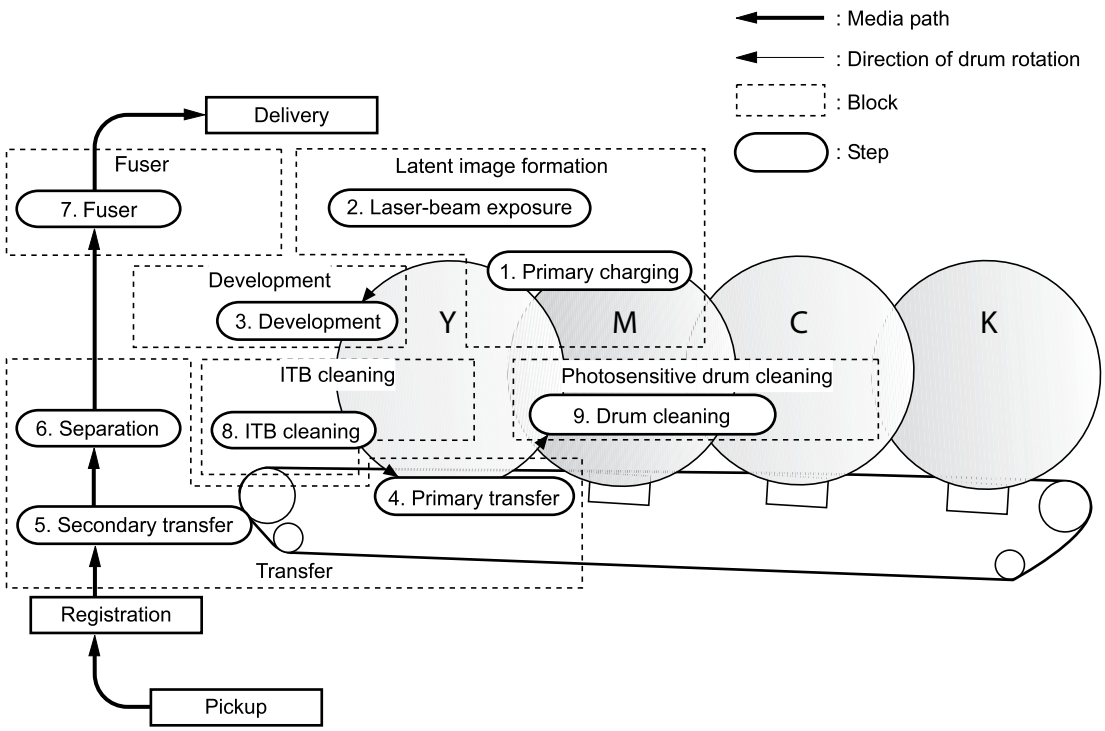

Latent-image formation stage

During the steps that comprise this stage, a latent image is formed by applying a negative charge to the photosensitive drum. You cannot see this image on the drum.

Step 1: primary charging

A high-voltage DC bias is applied to the primary charging roller, which is made of conductive rubber and is in contact with the drum surface. As the roller moves across the drum, it applies the negative charge to that surface.

Figure 5-12 Primary charging

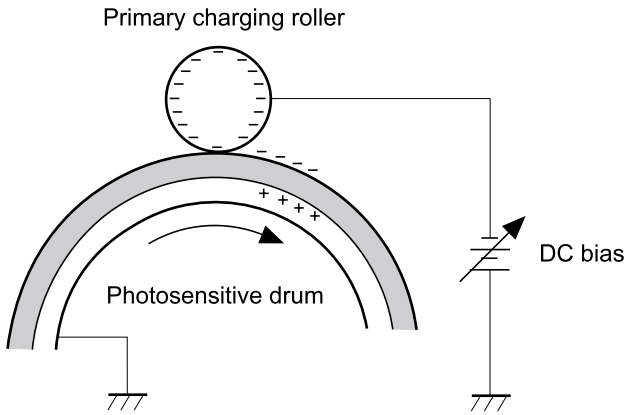

Step 2: laser-beam exposure

The laser beam scans the photosensitive drum to neutralize the negative charge on portions of the drum surface. An electrostatic latent image is formed where the negative charge was neutralized.

Figure 5-13 Laser-beam exposure

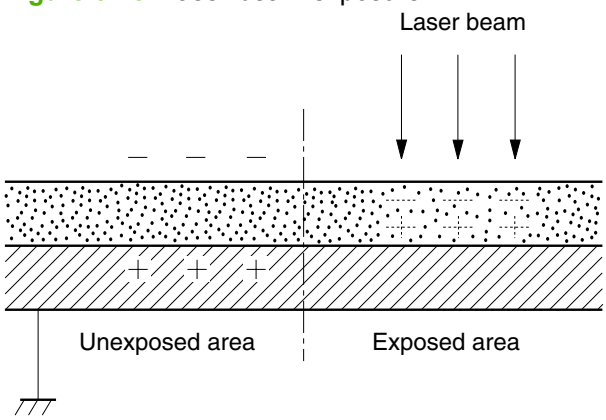

Developing stage

The developing cylinder comes in contact with the photosensitive drum and deposits toner on the electrostatic latent image.

Step 3: development

Toner acquires a negative charge as a result of the friction from the developing cylinder rotating against the developing blade. When the negatively charged toner comes in contact with the drum, it adheres to the electrostatic latent image. When the toner is on the drum, the image becomes visible.

Figure 5-14 Development

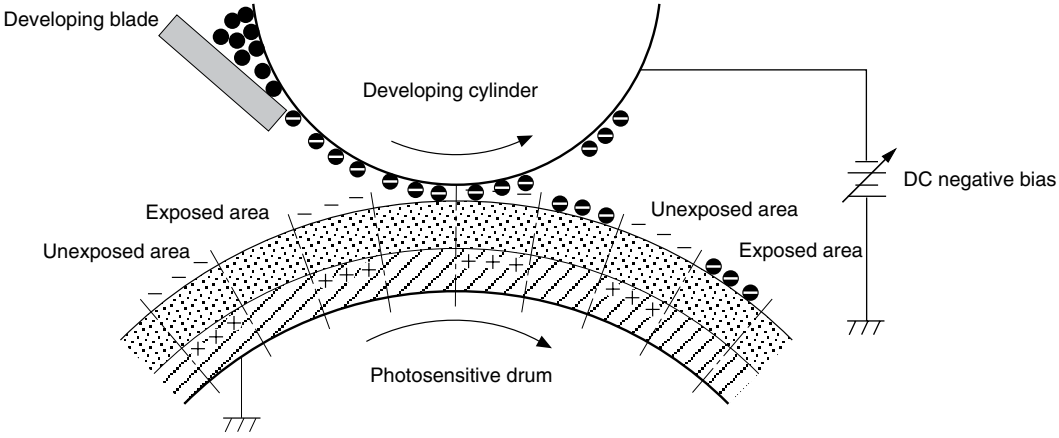

Transfer stage

Step 4: primary transfer

The toner image on the photosensitive drum is transferred to the ITB. The DC positive bias is applied to the primary transfer pad. The negatively charged toner transfers to the ITB from the drum surface.

Figure 5-15 Primary transfer

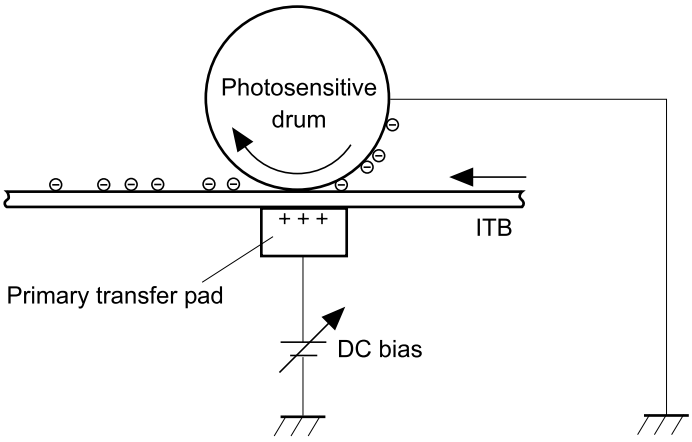

Step 5: secondary transfer

The toner image on the ITB is transferred to the print media. The DC positive bias is applied to the secondary transfer roller. As the media passes between the secondary transfer roller and the ITB, the toner image is transferred to the media.

Figure 5-16 Secondary transfer

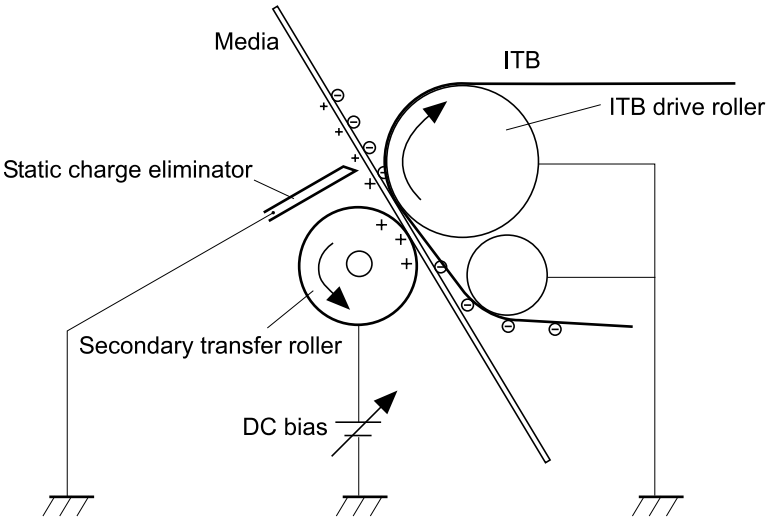

Step 6: separation from the drum

The elasticity of the print media and the curvature of the ITB drive roller cause the media to separate from the ITB.

Figure 5-17 Separation from the drum

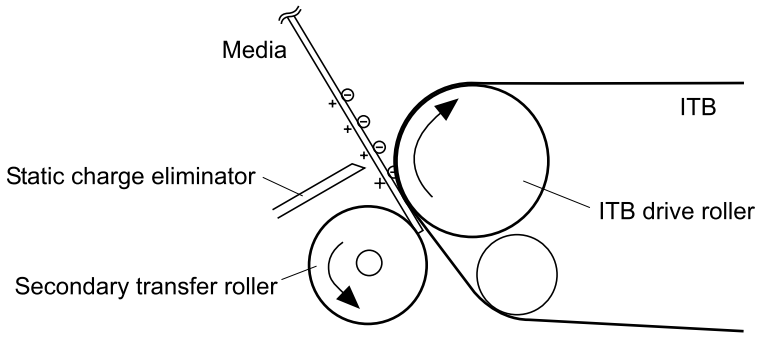

Fusing stage

Until the fusing stage is complete, the image is not permanently affixed to the print media. The toner can be easily smudged until the heat and pressure of the fusing process fix the image to the sheet.

Step 7: fusing

The product uses an on-demand fusing method to fuse the toner image onto the media. The toner image is permanently affixed to the print media by the heat and pressure.

Figure 5-18 Fusing

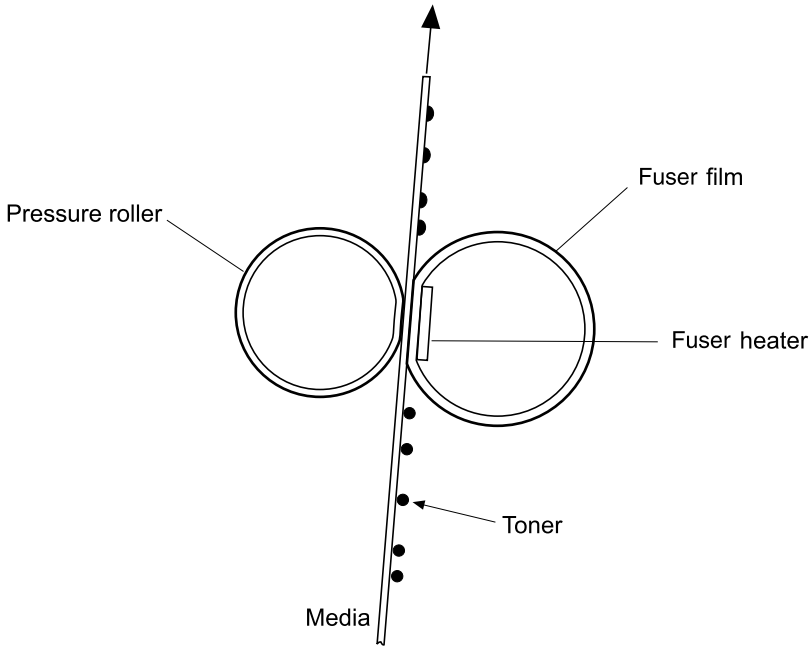

ITB cleaning stage

Step 8: ITB cleaning

The ITB cleaning roller and the cleaning brush are applied with DC positive bias to charge the residual toner positive. Because the primary transfer pad is also applied with DC positive bias, the positively charged residual toner is reverse-transferred to the photosensitive drum from the ITB surface.

Figure 5-19 ITB cleaning

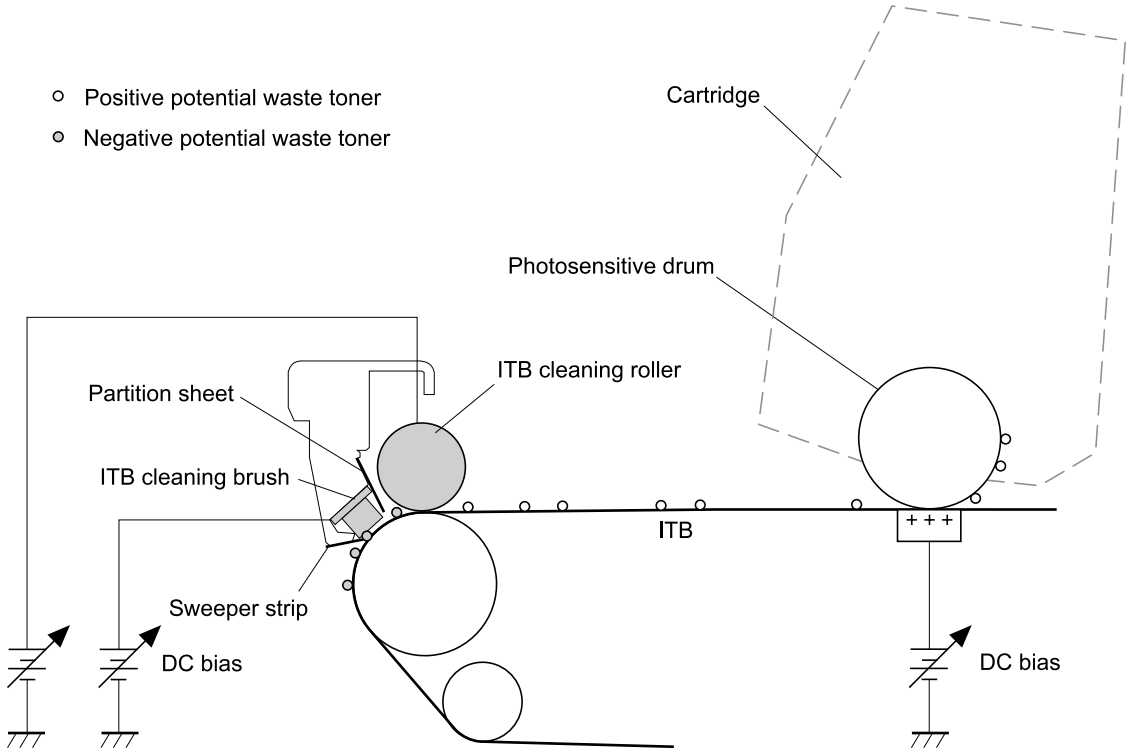

Drum cleaning stage

Not all of the toner is removed from the photosensitive drum during the transfer stage. During the cleaning stage, the residual, or waste, toner is cleared from the drum surface to prepare the surface for the next latent-image formation.

Step 9: drum cleaning

The cleaning blade scrapes the residual toner off the surface of the photosensitive drum and deposits it in the waste-toner container. The drum is now clear, and is ready for the next image-formation process.

Figure 5-20 Drum cleaning

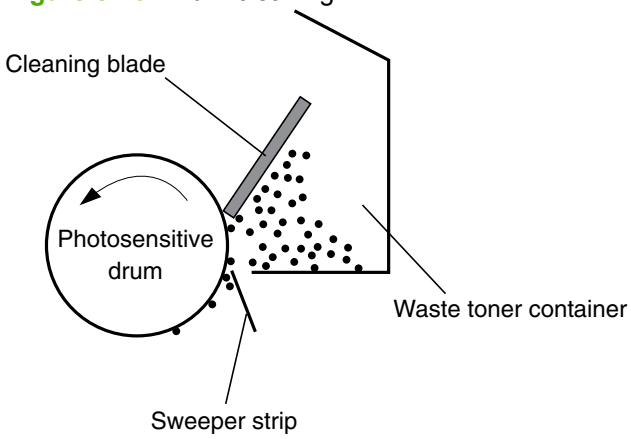

Developing roller engagement/disengagement control

The developing roller engagement/disengagement control engages the required developing roller with the photosensitive drum according to the print mode—full-color mode or monochrome mode.

The necessary developing roller is engaged with the photosensitive drum only when required, preventing a deterioration of the drums and making maximum use of the life. The engagement/disengagement of the developing roller is controlled by the DC controller rotating the main motor and changing the direction of the developing disengagement cam. The DC controller controls the developing roller state, whether engaged or disengaged, by detecting the output signal from the developing home position sensor.

All four color developing rollers disengage from the photosensitive drums when the product is turned on and when a print operation is completed. The color developing rollers engage with the photosensitive drums when the full-color mode is designated. Only the black developing roller engages with the photosensitive drum when the monochrome mode is designated.

The DC controller determines an abnormality of the developing roller engagement/disengagement function and notifies the formatter when it does not sense the signal from the developing home-position sensor for a specified period during the developing roller engagement/disengagement operation.

Pickup-and-feed system

The pickup-and-feed system picks up and feeds the print media. It consists of several types of feed rollers.

Figure 5-21 Pickup-and-feed system

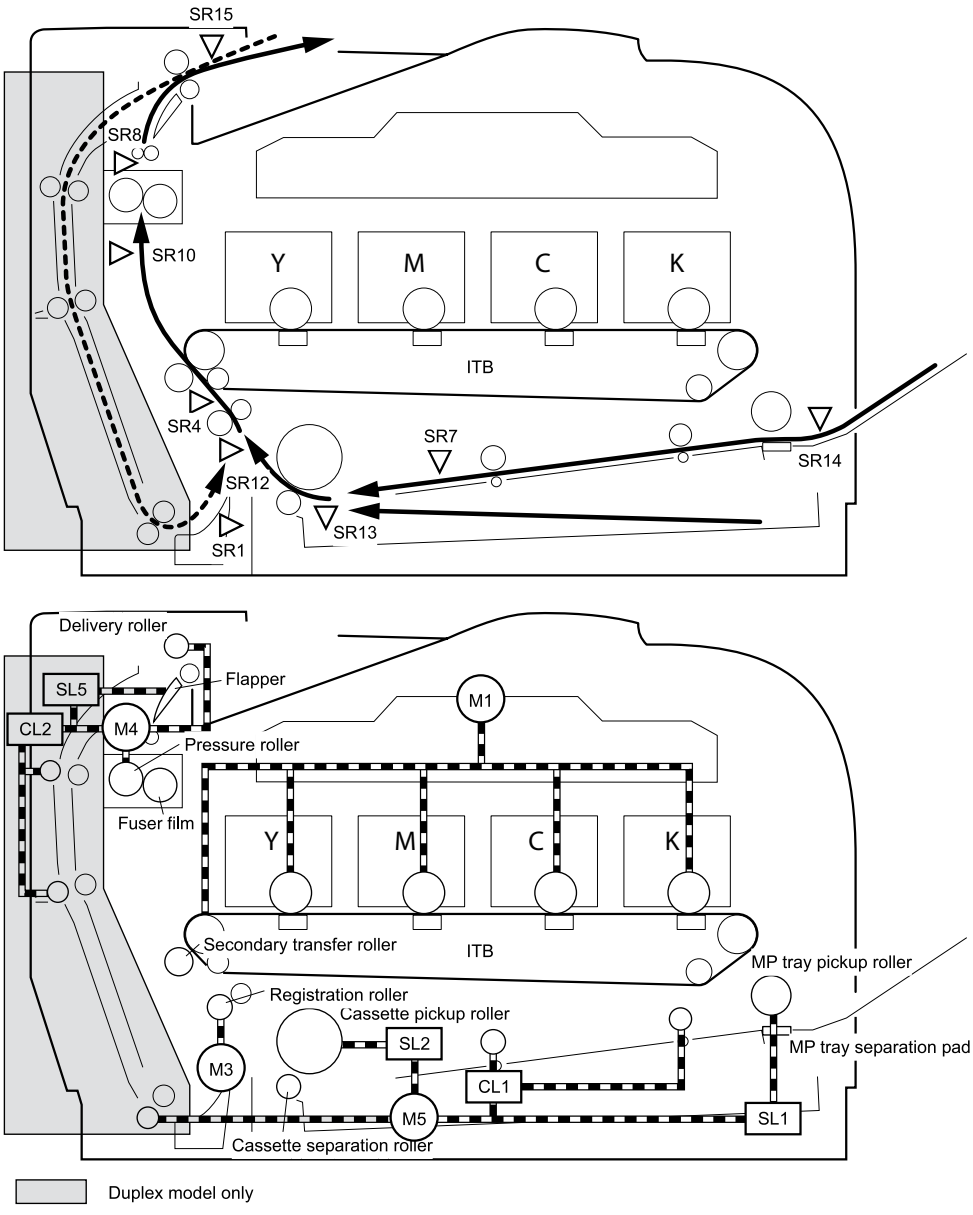

Number	Description	Number	Description
SR1	Paper feeder pre-registration sensor	M1	Drum motor
SR4	Registration sensor	M3	Registration motor

Number	Description	Number	Description
SR7	Multipurpose tray pre-registration sensor	M4	Fuser motor
SR8	Fuser delivery sensor	M5	Pickup motor
SR10	Loop sensor	SL1	Multipurpose tray pickup solenoid
SR12	Pre-registration sensor	SL2	Cassette pickup solenoid
SR13	Cassette media-presence sensor	SL5	Duplex reverse solenoid (duplex models only)
SR14	Multipurpose tray media-presence sensor	CL1	Multipurpose tray feed clutch
SR15	Output bin media full sensor	CL2	Duplex feed clutch (duplex models only)

Jam detection

The product uses the following sensors to detect the presence of media and to check whether media is being fed correctly or has jammed:

- Registration sensor
- Multipurpose tray pre-registration sensor
- Fuser delivery sensor
- Loop sensor
- Pre-registration sensor
- Cassette media-presence sensor
- Multipurpose tray media-presence sensor
- Output bin media full sensor
- Paper feeder pre-registration sensor

The product detects the following jams:

- Pickup delay jam
- Pickup stationary jam
- Delivery delay jam
- Delivery stationary jam
- Fuser wrapping jam
- Residual media jam
- Duplex re-pickup unit jam (duplex models only)

Pad transfer

The product uses a pad transfer method for the primary transfer operation. The pad transfer method stabilizes an image compared to the conventional separation roller method. The wider nip width between the transfer pad and the photosensitive drum improves the transfer performance.

Multiple-feed prevention

The product uses a separation roller to prevent multiple sheets of media from entering the product. The paper separation roller follows the rotational direction of the pickup roller because it does not have its own driving force.

- **Normal-feed**: The separation roller is driven by the pickup roller through a sheet of print media. That is, the separation roller rotates in the media feed direction.
- **Multiple-feed**: The low friction force between the sheets weakens the rotational force from the pickup roller. The separation roller is limited in its rotational force and it does not rotate with such a weak driving force from the pickup roller. Since the separation roller does not rotate, the multiple sheets do not feed into the product.

The following figure illustrates the mechanism of the multiple-feed prevention.

Figure 5-22 Multiple-feed prevention

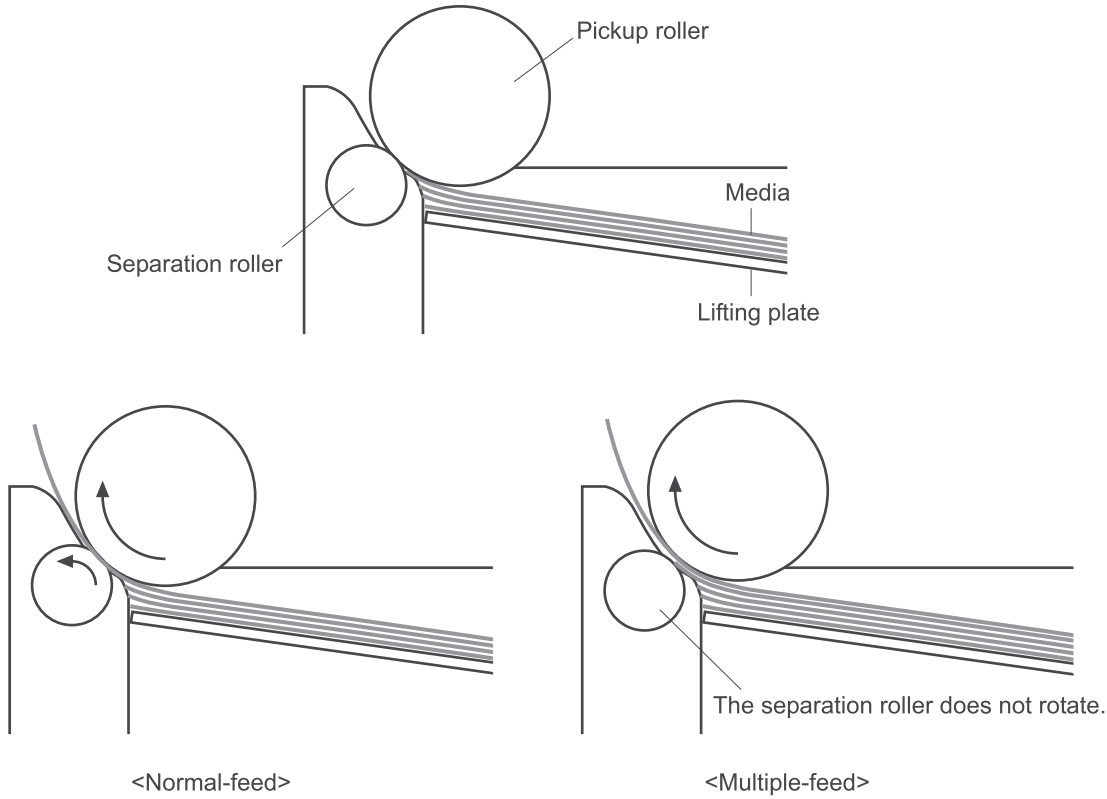

Scanner and ADF functions and operation

The following sections describe how the document scanner and the automatic document feeder (ADF) function.

Scanner functions

The scanner uses a light source, a color-separation method, and a charge-coupled device (CCD) array to collect optical information about the document and transform that into an image file. The scanner consists of these elements:

- A lamp (LED)
- Five mirrors and a lens
- A CCD

Figure 5-23 Optical system

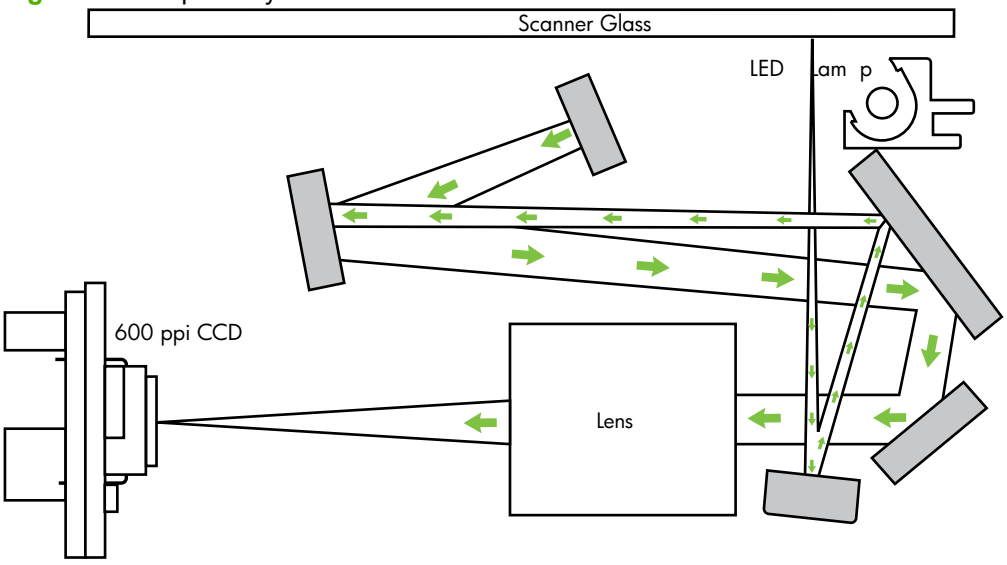

The scanner lamp illuminates a small strip of the document (called the *raster line*). The mirrors direct the light through the lens to the CCD. The CCD senses and records the light, creating an analog representation of the raster line. If the ADF is being used, the document then advances in the ADF to the next raster line. If the flatbed is being used, the scanner module advances to the next raster line. This advancing and collection process continues to the end of the sheet.

The image data is collected in the motor controller board, where it is processed and sent to the formatter. The formatter then handles the image data, outputting it as a copy, sending it through the fax card as a fax, or directing it to the computer as scanner output.

The image data collected is 600 pixels per inch (ppi). Each pixel has 8 bits for each of the three colors (256 gray scale levels for each color), or a total of 24 bits per pixel (24-bit color).

Scanner operation

At power-on and periodically at other times, the scanner assembly moves systematically to locate its home position. It then calibrates to a white strip located under the glass at the left end of the scan tub.

If the product detects a document in the ADF when a copy or scan is initiated (from the software or the control panel), the scan module moves to the left side of the scan tub and stops. The image is acquired as the paper is fed through the ADF past the scanner module.

If no document is detected in the ADF, the scan module acquires the image from the flatbed glass while slowly moving within the scan tub.

ADF operation

Standby (paper-loading) mode: In standby mode, the pickup roller is up and the stack-stop is down, preventing the user from inserting the original document too far. When a document is inserted correctly, the paper-present sensor detects its presence.

The standard operation of the ADF consists of the pick, feed, and lift steps.

Pick: When it receives a copy or scan command, the ADF motor engages the gear train to lower the pickup-roller assembly and raise the stack-stop. The first roller, called the pre-pick roller, moves the top few sheets forward into the ADF. The next roller is the pickup roller. This roller contacts the ADF separation pad, which separates multiple pages into single sheets.

Feed: The single sheet continues through the path. Along the way, the form sensor, which is a set distance from the ADF glass, detects the sheet. This alerts the scanner to start when the page reaches the glass. The scanner acquires the image, one raster line at a time, until it detects the end of the page. The page is then ejected. The pick and feed steps are repeated as long as paper is detected in the ADF input tray.

Lift: When no more paper is detected in the ADF input tray and the form sensor detects the trailing edge of the last page, the last sheet is ejected and the motor turns in a sequence that lifts the pick-roller assembly to standby (paper-loading) mode again.

The ADF will not function when the ADF cover is open. The paper path is incomplete if the ADF cover is lifted from the glass.

When the product duplexes from the ADF, the paper passes through the ADF three times. During the second instance, the product reverses the page orientation and then scans it. During the third instance, the product returns the page to the original orientation.

ADF paper path and ADF sensors

The following diagram shows the ADF paper path during a two-sided (duplexed) copy job. The paper enters the product from the ADF input tray and passes through the paper path for the first time (callout 1). The product then pulls the paper back through the path (callout 2) in order to reorient the page and scan the second side. The paper then travels back to the end of the paper path, where it is pulled in one more time to travel through the paper path (callout 3) in order for the product to reorient the page again before sending it out of the paper path and pulling in the next sheet.

Figure 5-24 ADF paper path routes during duplex job

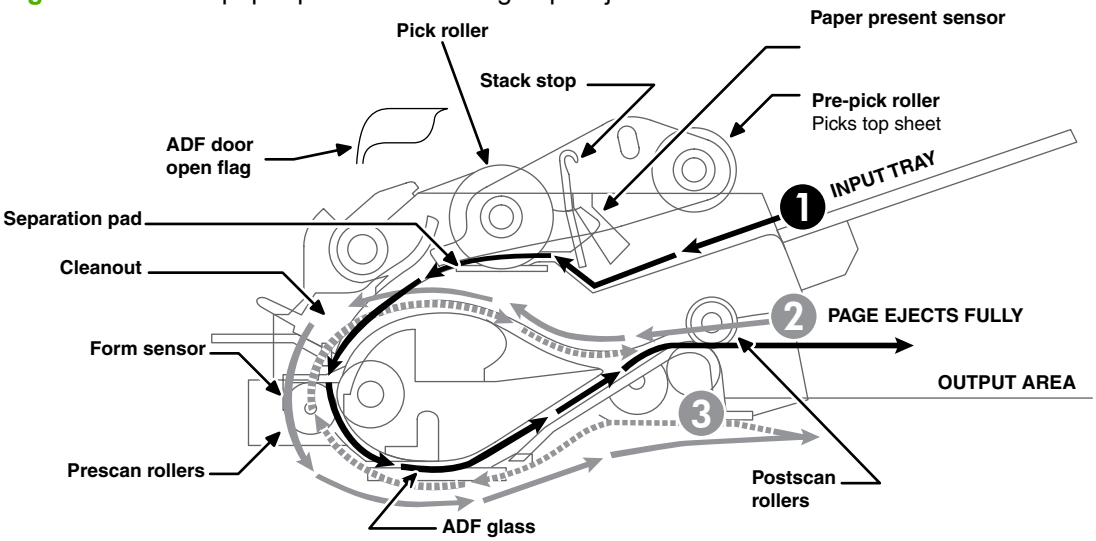

The paper-present sensor determines if paper is in the ADF. The form sensor detects the top and bottom edges of the document. One other sensor detects an open ADF door.

ADF jam detection

The ADF has two sensors that detect paper. The paper-present sensor detects the presence of media in the ADF input tray. The form sensor detects media moving through the ADF. If a jam is detected, the ADF immediately stops the paper feeding and a jam message appears on the control-panel display.

A jam can be detected under any of the following conditions:

- **Document-feeder jam**. When documents are detected in the ADF input tray, and a command to copy, scan or fax is received, the scan module travels to the left side of the scan assembly and stops beneath the ADF scanner glass. The ADF then attempts three times, or for about ten seconds, to advance the paper to the form sensor. If the paper does not advance, the scan module travels back to the home position on the right side of the scanner assembly. The message **Document feeder mispick. Reload.** appears on the control-panel display.
- **Long-document jam**. If the paper has advanced to trigger the form sensor, but the trailing edge is not detected within the time allowed for a 381-mm (15-inch) document (the maximum allowable page length for the ADF), the scanner returns to the home position on the right side of the scanner assembly. The message **Doc feeder jam. Clear, Reload.** appears on the control-panel display.
- **Stall jam**. When a page that is less than 381 mm (15 inches) long has advanced to the form sensor but has not left it within the expected time, the paper has probably stalled or jammed. The scanner returns to the home position on the right side of the scanner assembly. The message **Doc feeder jam. Clear, Reload.** appears on the control-panel display.
- **Other**. If the paper stops in the ADF and the scan module remains under the ADF scanner glass, an internal firmware error has probably occurred. This is usually remedied by cycling the power.

Memory card system (fax/memory-card models only)

The memory card reader consists of slots where the following memory cards can be inserted:

- CompactFlash
- Memory Stick
- Memory Stick PRO
- Secure Digital
- MultiMediaCard
- xD

Only one card can be installed at a time.

The green memory card LED will blink when the product is reading the installed memory card. The files present on the memory card can be accessed from a computer by using the mounted drive for a directly connected host, or by using the product IP address from a networked computer. For example:

```
\\192.168.2.12\memory_card
```

Any .jpg files on the card can be printed directly from the product control panel. Pages also can be scanned and saved to the memory card directly from the control panel.

Fax functions and operation (fax/memory-card models only)

The following sections describe the product fax capabilities.

Computer and network security features

The product can send and receive fax data over telephone lines that conform to public switch telephone network (PSTN) standards. The secure fax protocols make it impossible for computer viruses to be transferred from the telephone line to a computer or network.

The following product features prevent virus transmission:

- No direct connection exists between the fax line and any devices that are connected to the USB or Ethernet ports.
- The internal firmware cannot be modified through the fax connection.
- All fax communications go through the fax subsystem, which does not use Internet data-exchange protocols.

PSTN operation

The PSTN operates through a central office (CO) that generates a constant voltage on the TIP and RING wires (48 V, usually). A device goes on-hook by connecting impedance (such as 600 ohms for the U.S.) across the TIP and RING so that a line current can flow. The CO can detect this current and can send impulses like dial tones. The product generates more signaling tones, such as dialing digits, to tell the CO how to connect the call. The product can also detect tones, such as a busy tone from the CO, that tell it how to behave.

When the call is finally connected, the CO behaves like a piece of wire connecting the sender and receiver. This is the period during which all of the fax signaling and data transfer occurs. When a call is completed, the circuit opens again and the line-current flow ceases, removing the CO connection from both the sender and the receiver.

On most phone systems, the TIP and RING wires appear on pins 3 and 4 of the RJ-11 modular jack (the one on the fax card). These two wires do not have to be polarized because all the equipment works with either TIP or RING on pin 3 and the other wire on pin 4. This means that cables of either polarity can interconnect and will still work.

These basic functions of PSTN operation are assumed in the design of the fax subsystem. The product generates and detects the signaling tones, currents, and data signals that are required to transmit and receive faxes on the PSTN.

Receive faxes when you hear fax tones

In general, incoming faxes to the product are automatically received. However, if other devices are connected to the same phone line, the product might not be set to answer automatically.

If the product is connected to a phone line that receives both fax and phone calls, and you hear fax tones when you answer the extension phone, receive the fax in one of two ways:

- If you are near the product, press Start Fax on the control panel.
- Press 1-2-3 in sequence on the extension phone keypad, listen for fax transmission sounds, and then hang up.

NOTE: In order for the 1-2-3 sequence to work, the extension phone setting must be set to **On** in the **Fax setup** menu.

Distinctive ring function

Distinctive ring is a service that a telephone company provides. The distinctive ring service allows three phone numbers to be assigned to one phone line. Each phone number has a distinctive ring. The first phone number has a single ring, the second phone number has a double ring, and the third phone number has a triple ring.

NOTE: The product has not been tested with all of the distinctive-ring services that telephone companies provide in all countries/regions. HP does not guarantee that the distinctive-ring function will operate correctly in all countries/regions. Contact the local phone service provider for assistance.

Set up the distinctive ring function

1. Press Setup.
2. Use the arrow buttons to select **Fax setup**, and then press OK.
3. Use the arrow buttons to select **Basic setup**, and then press OK.
4. Use the arrow buttons to select **Distinctive Ring**, and then press OK.
5. Use the arrow buttons to select one of the following options:

   NOTE: The control-panel display might show some of these options as abbreviations.

   - **All Rings** (default setting)
   - **Single**
   - **Double**
   - **Triple**
   - **Double and Triple**

   Press OK to save the setting.

Fax by using Voice over IP services

Voice over IP (VoIP) services provide normal telephone service, including long distance service through a broadband Internet connection. These services use packets to break up the voice signal on a telephone line and transmit it digitally to the receiver, where the packets are reassembled. The VoIP services are often not compatible with fax machines. The VoIP provider must state the service supports fax over IP services.

Because the installation process varies, the VoIP service provider will have to assist in installing the product fax component.

Although a fax might work on a VoIP network, it can fail when the following events occur:

- Internet traffic becomes heavy and packets are lost.
- Latency (the time it takes for a packet to travel from its point of origin to its point of destination) becomes excessive.

If you experience problems using the fax feature on a VoIP network, ensure that all of the product cables and settings are correct. Configuring the **Fax Speed** setting to **Medium(V.17)** or **Slow(V.29)** can also improve your ability to send a fax over a VoIP network.

If you continue to have problems faxing, contact your VoIP provider.

The fax subsystem

The formatter, fax card, firmware, and software all contribute to the fax functionality. The designs of the formatter and fax card, along with parameters in the firmware, determine the majority of the regulatory requirements for telephony on the product.

The fax subsystem is designed to support V.34 fax transmission, lower speeds (such as V.17 fax), and older fax machines.

Fax card in the fax subsystem

Two versions of the fax card are used in the product. One is used in the North American, South American, and Asian countries/regions. The other is used primarily in European countries/regions.

The fax card contains the modem chipset (DSP and CODEC) that controls the basic fax functions of tone generation and detection, along with channel control for fax transmissions. The CODEC and its associated circuitry act as the third-generation silicon data access arrangement (DAA) to comply with worldwide regulatory requirements.

The only difference between the two versions is that each version is compliant with the 2/4-wire phone jack system from the respective country/region.

Safety isolation

The most important function of the fax card is the safety isolation between the high-voltage, transient-prone environment of the telephone network (TNV [telephone network voltage]) and the low-voltage analog and digital circuitry of the formatter (SELV [secondary extra-low voltage]). This safety isolation provides both customer safety and product reliability in the telecom environment.

Any signals that cross the isolation barrier do so magnetically. The breakdown voltage rating of barrier-critical components is greater than 5 kV.

Safety-protection circuitry

In addition to the safety barrier, the fax card protects against over-voltage and over-current events.

Telephone over-voltage events can be either differential mode or common mode. The event can be transient in nature (a lightning-induced surge or ESD) or continuous (a power line crossed with a phone line). The fax card protection circuitry provides margin against combinations of over-voltage and over-current events.

Common mode protection is provided by the selection of high-voltage-barrier critical components (transformer and relay). The safety barrier of the fax card PCB traces and the clearance between the fax card and surrounding components also contribute to common mode protection.

A voltage suppressor (a crowbar-type SIDACTOR) provides differential protection. This product becomes low impedance at approximately 300 V differential, and crowbars to a low voltage. A series thermal switch works in conjunction with the crowbar for continuous telephone line events, such as crossed power lines.

All communications cross the isolation barrier magnetically. The breakdown voltage rating of barrier-critical components is greater than 5 kV.

Data path

TIP and RING are the two-wire paths for all signals from the telephone network. All signaling and data information comes across them, including fax tones and fax data.

The telephone network uses DC current to determine the hook state of the telephone, so line current must be present during a call. The silicon DAA provides a DC holding circuit to keep the line current constant during a fax call.

The silicon DAA converts the analog signal to a digital signal for DSP processing, and also converts the digital signal to an analog signal for transmitting data through a telephone line.

The magnetically coupled signals that cross the isolation barrier go either through a transformer or a relay.

The DSP in the fax card communicates with the ASIC in the formatter using direct-register access.

Hook state

Another magnetically coupled signal is the control signal that disconnects the downstream telephone devices (such as a phone or answering machine). A control signal originating on the DSP can change the relay state, causing the auxiliary jack (downstream jack) to be disconnected from the telephone circuit.

The product takes control of calls that it recognizes as fax calls. If the product does not directly pick up the call, it monitors incoming calls for the fax tone or for the user to direct it to receive a fax. This idle mode is also called eavesdropping. This mode is active when the product is on-hook but current exists in the downstream phone line because another device is off-hook. During eavesdropping, the receive circuit is enabled but has a different gain from the current that is generated during normal fax transmissions.

The product does not take control of the line unless it detects a fax tone or the user causes it to connect manually. This feature allows the user to make voice calls from a phone that is connected to the product without being cut off if a fax is not being received.

Downstream device detection

The line voltage monitoring module of the silicon DAA can detect the line state of parallel-connected devices as well as the downstream device. It tells DSP via DIB that an active device (telephone, modem, or answering machine) is connected to the auxiliary port on the product (the top port of the RJ-11 jack). The DSP uses the signal to ensure that the product does not go off-hook (and disconnect a downstream call) until it has been authorized to do so (by a manual fax start or the detection of the appropriate tones).

Hook switch control

In the silicon DAA the CODEC controls the hook switch directly. The CODEC is activated when it receives commands from the DSP. When the circuit is drawing DC current from the central office it is considered off-hook. When no DC current flows the state is considered on-hook.

Ring detect

Ring detect is performed by the line voltage monitoring module of the silicon DAA, and is a combination of voltage levels and cadence (time on and time off). Both must be present to detect a valid ring. The

CODEC works with DSP as well as the firmware to determine if an incoming signal is an answerable ring.

Line current control

The DC current from the CO needs to have a path to flow from TIP to RING. The DC impedance emulation line modulator and DC terminations modules in the silicon DAA act as a DC holding circuit, and works with the firmware to achieve the voltage-current characteristic between TIP and RING. The impedance (the current-voltage characteristic) changes corresponding to certain special events, such as pulse dialing or when the product goes on-hook.

Billing- (metering-) tone filters

Switzerland and Germany provide high-frequency AC signals on the phone line in order to bill customers.

A filter in a special fax cable (for certain countries/regions), can filter these signals. Because these billing signals are not used in the U.S., these filters are not present in the U.S. fax cable.

To obtain a special fax cable, contact your local telephone service provider.

Fax page storage in flash memory

Fax pages are the electronic images of the document page. They can be created in any of three ways: scanned to be sent to another fax machine, generated to be sent by the computer, or received from a fax machine to be printed.

The product stores all fax pages in flash memory automatically. After these pages are written into flash memory, they are stored until the pages are sent to another fax machine, printed on the product, transmitted to the computer, or erased by the user.

These pages are stored in flash memory, which is the nonvolatile memory that can be repeatedly read from, written to, and erased. The product has 4 MB of flash memory, of which 3.5 MB is available for fax storage. The remaining 0.5 MB is used for the file system and reclamation. Adding RAM does not affect the fax page storage because the product does not use RAM for storing fax pages.

Stored fax pages

The user can reprint stored fax receive pages in case of errors. For a fax send, the product will resend the fax in case of errors. The product will resend stored fax pages after a busy signal, communication error, no answer, or power failure. Other fax devices store fax pages in either normal RAM or short-term RAM. Normal RAM immediately loses its data when power is lost, while short-term RAM loses its data about 60 minutes after power failure. Flash memory maintains its data for years without any applied power.

Advantages of flash memory storage

Fax pages that are stored in flash memory are persistent. They are not lost as a result of a power failure, no matter how long the power is off. Users can reprint faxes in case the print cartridge runs out of toner or the product experiences other errors while printing faxes.

The product also has scan-ahead functionality that makes use of flash memory. Scan-ahead automatically scans pages into flash memory before a fax job is sent. This allows the sender to pick up the original document immediately after it is scanned, eliminating the need to wait until the fax is transmission is complete.

Because fax pages are stored in flash memory rather than RAM, more RAM is available to handle larger and more complicated copy and print jobs.

6 Removal and replacement

Removal and replacement strategy

This chapter discusses the removal and replacement of field replaceable units (FRUs) only.

Replacing FRUs is generally the reverse of removal. Occasionally, notes and tips are included to provide directions for difficult or critical replacement procedures.

HP does *not* support repairing individual subassemblies or problem solving at the component level.

Note the length, diameter, color, type, and location of each screw. Be sure to return each screw to its original location during reassembly.

Incorrectly routed or loose wire harnesses can interfere with other internal components and can become damaged or broken. Frayed or pinched harness wires can be difficult to locate. When replacing wire harnesses, always use the provided wire loops, lance points, or wire-harness guides.

General cautions during removal and replacement

⚠ **WARNING!** Turn the product off, wait 5 seconds, and then remove the power cord before attempting to service the product. If this warning is not followed, severe injury can result, as well as damage to the product. The power must be on for certain functional checks during problem solving. However, the power cord should be disconnected during parts removal.

Never operate or service the product with the protective cover removed from the laser/scanner assembly. The reflected beam, although invisible, can damage your eyes.

The sheet-metal parts can have sharp edges. Be careful when handling sheet-metal parts.

△ **CAUTION:** Do not bend or fold the flat flexible cables (FFCs) during removal or installation. Also, do not straighten pre-folds in the FFCs. You *must* make sure that all FFCs are fully seated in their connectors. Failure to fully seat an FFC into a connector can cause a short circuit in a PCA.

Avoid pulling directly on wires to disconnect wire-harness connectors. Pull on the plastic body of a connector when ever possible to avoid damaging the connector wires.

NOTE: To install a self-tapping screw, first turn it counterclockwise to align it with the existing thread pattern, and then carefully turn it clockwise to tighten. Do not overtighten. If a self-tapping screw-hole becomes stripped, repair the screw-hole or replace the affected assembly.

Electrostatic discharge

△ **CAUTION:** Some parts are sensitive to electrostatic discharge (ESD). Look for the ESD reminder when removing product parts. Always perform service work at an ESD-protected workstation or mat. If an ESD workstation or mat is not available, ground yourself by touching the sheet-metal chassis *before* touching an ESD-sensitive part.

Protect the ESD-sensitive parts by placing them in ESD pouches when they are out of the product.

Required tools

- Number 2 Phillips screwdriver with a magnetic tip and a 152-mm (6-inch) shaft length
- Precision slotted screwdriver with a 1 mm (0.04 in) blade width

  NOTE: This fine-point tool is required to release the front door pins. The width of the blade must be 2 mm (0.08 in) or less to be able to drive the door pins out of the mounting holes.

- Small, slotted screwdriver
- Needle-nose pliers
- Snap-ring pliers
- ESD mat (if one is available)
- Penlight (optional)

CAUTION: Always use a Phillips screwdriver (callout 1). Do not use a pozidrive screwdriver (callout 2) or any motorized screwdriver. These can damage screws or screw threads.

Figure 6-1 Phillips and pozidrive screwdriver comparison

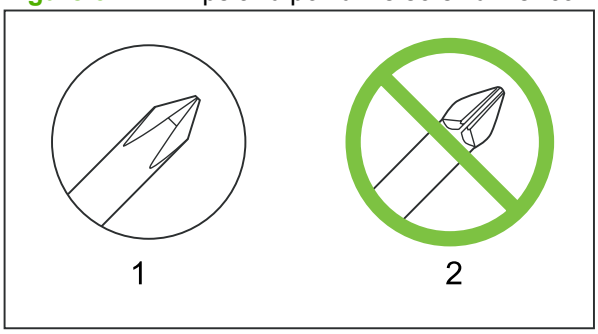

Types of screws

WARNING! Make sure that components are replaced with the correct screw type. Using the incorrect screw (for example, substituting a long screw for the correct shorter screw) can cause damage to the product or interfere with product operation. Do not intermix screws that are removed with one component with the screws that are removed from another component.

For a complete list of screw types and part numbers, see Parts and diagrams on page 327.

Service approach

Before performing service

- Remove all media from the product.
- Turn off the power using the power switch.
- Unplug the power cable and interface cable(s).
- Place the product on an ESD mat (if one is available). If an ESD workstation or mat is not available, ground yourself by touching the sheet-metal chassis *before* touching an ESD-sensitive part.
- Remove the print cartridges. See Print cartridges on page 122.
- Remove the tray 2 cassette.

After performing service

- Plug in the power cable.
- Reinstall the print cartridges.
- Reinstall the tray 2 cassette.

Post-service tests

After service has been completed, perform the following tests to verify that the repair or replacement was successful.

Test 1 (print-quality test)

1. Verify that you have completed the necessary reassembly steps.
2. Ensure that the input tray contains clean, unmarked paper.
3. Attach the power cord and interface cable, and then turn on the product.
4. Verify that the expected start-up sounds occur.
5. Print a configuration page, and then verify that the expected printing sounds occur.
6. Print a demo page, and then verify that the print quality is as expected.
7. Send a print job from the host computer, and then verify that the output meets expectations.
8. If necessary, restore any customer-specified settings.
9. Clean the outside of the product with a damp cloth.

Test 2 (copy-quality test)

1. Verify that you have completed the necessary reassembly steps.
2. Ensure that the input tray contains clean, unmarked paper.
3. Attach the power cord, and then turn on the product.
4. Verify that the expected start-up sounds occur.
5. Print a configuration page, and then verify that the expected printing sounds occur.
6. Place the configuration page in the ADF.
7. Print a copy job, and then verify the results.
8. Clean the outside of the product with a damp cloth.

Test 3 (fax-quality test; fax models only)

1. Place the configuration page in the ADF.
2. Type a valid fax number and send the fax job.
3. Verify that the send quality and receive quality meet expectations.

Print cartridges

△ **CAUTION:** If toner gets on your clothing, wipe it off with a dry cloth and wash the clothing in cold water. *Hot water sets toner into the fabric.*

1. Open the front door and pull out the print-cartridge drawer.
2. Grasp the handle on the print cartridge and then pull the cartridge straight up to remove it. Repeat this step for the remaining print cartridges.

   △ **CAUTION:** Do not touch the imaging drum (callout 1) on the bottom of the print cartridge. Skin oils on the imaging drum can cause print-quality problems.

   Do not place the print cartridge on a surface with the image drum down (callout 2). Protect the image drum at all times. Dust and debris can stick to the drum and cause print-quality problems.

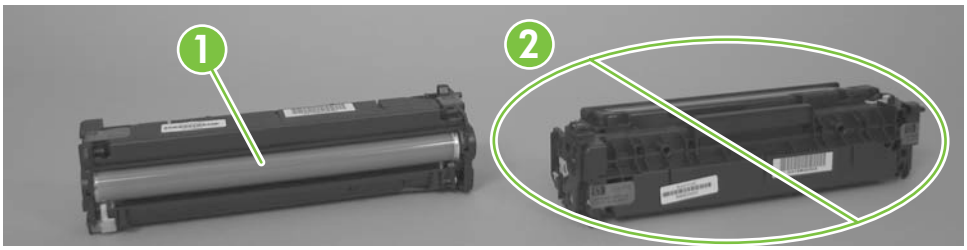

   NOTE: Do not place the print cartridges where they will be exposed to light for an extended time. Cover the print cartridges if necessary to protect them.

   Figure 6-2 Remove the print cartridge

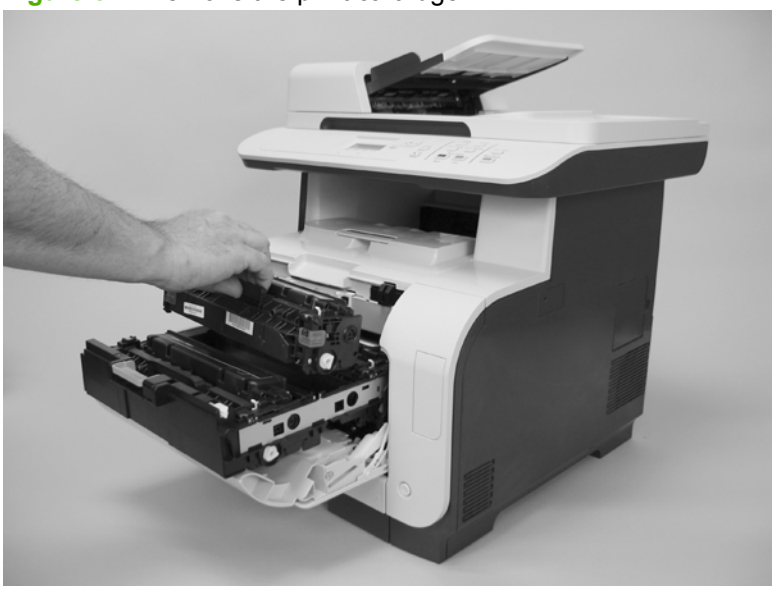

3. Close the print-cartridge drawer and the front door.

Tray cassettes and optional Tray 3 assembly

1. **Tray 2 and Tray 3 cassette**: Pull the tray straight out of the product to remove it.

   Figure 6-3 Remove the tray cassettes and optional Tray 3 assembly (1 of 2)

   

2. **Optional Tray 3 assembly**: Lift the product straight up from the assembly, and then set the product on a sturdy, level surface.

   △ **CAUTION:** Lift the product by using the right- and left-side hand-holds. Do not lift the product by grasping the Tray 2 cassette, or the cavity created if the cassette is removed.

   Figure 6-4 Remove the tray cassettes and optional Tray 3 assembly (2 of 2)

   

Control-panel bezel

Carefully pry up on one end of the control-panel bezel to release it. Continue to pry up on the bezel to remove it.

Figure 6-5 Remove the control-panel bezel

Control panel

1. Remove the control-panel bezel. See Control-panel bezel on page 124.
2. Release one tab (callout 1) and then slide the control panel toward the left side of the product to release it.

Figure 6-6 Remove the control-panel (1 of 2)

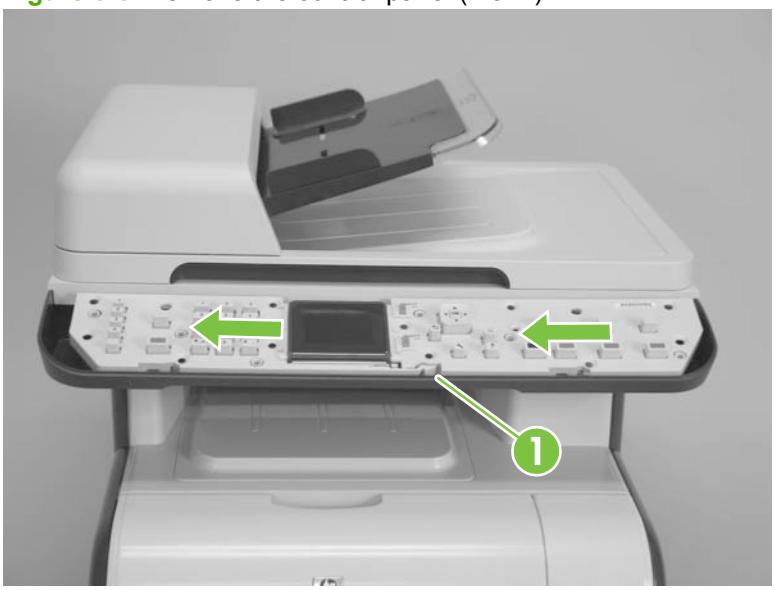

3. Rotate the control panel up and off of the product, and then disconnect two FFCs (callout 2).

NOTE: The base model only has one FFC.

Figure 6-7 Remove the control-panel (2 of 2)

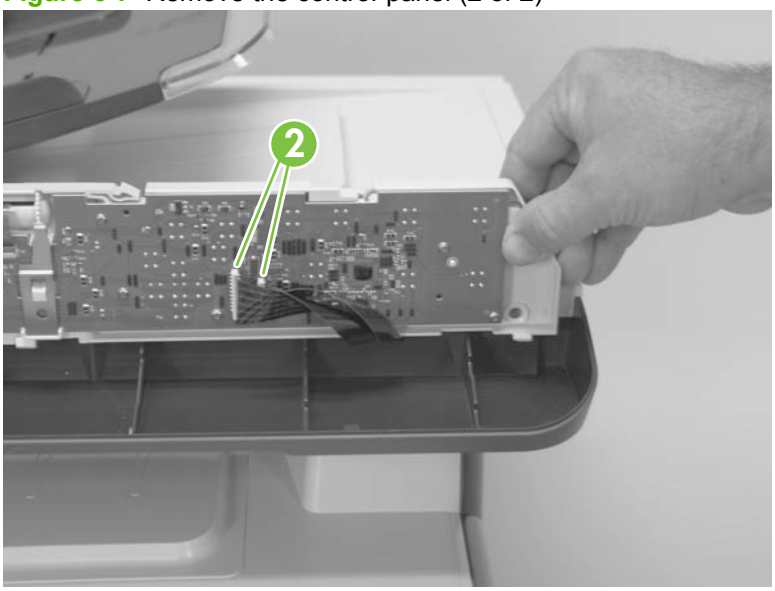

Reinstall the control panel

1. Connect the FFCs and verify that they are fully seated.

   NOTE: The base model only has one FFC.

2. When you reinstall the control panel, make sure the two lower tabs on the control panel (callout 3), and the three upper tabs on the control panel (callout 4) are positioned under the tabs on the scanner chassis (callout 5).

   Figure 6-8 Reinstall the control-panel

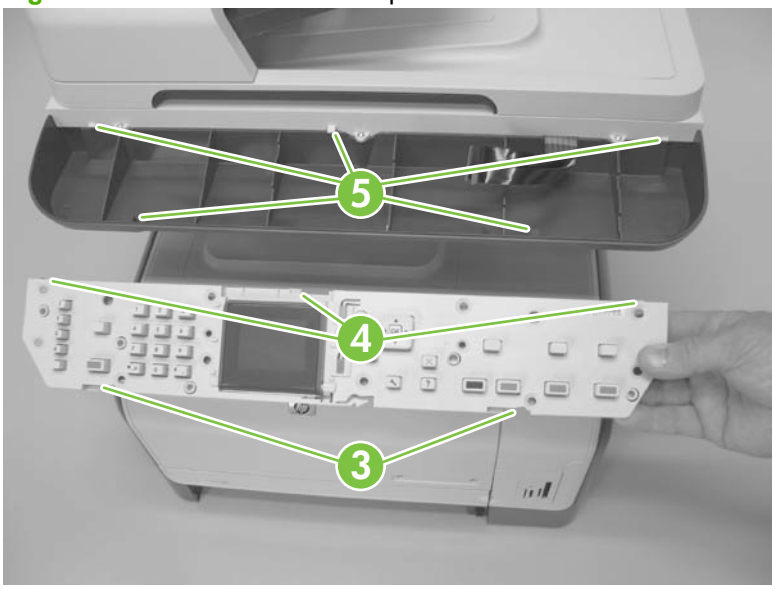

Paper-feed rollers and pads

Transfer roller

The transfer roller is a component of the paper-feed assembly and not available as an individual FRU. To remove and replace the transfer roller, install a replacement paper-feed assembly. See Paper-feed guide assembly on page 150.

Pickup roller (Tray 2 and Tray 3)

The roller must be rotated into the service position to remove it.

△ **CAUTION:** Avoid touching the spongy roller surface unless you are going to replace the roller. Skin oils on the roller can cause paper pickup problems.

1. Turn the product on, and wait for it to reach the **Ready** state. Perform the following steps to rotate the roller to the service position.

   NOTE: If you have removed Tray 2 to service the product, reinstall the tray before turning the power on.

   TIP: The following steps rotate the engine paper-pickup roller *and* the Tray 1 paper-pickup roller into the service position.

   a. Open the **2ndry Service** menu by pressing the Left Arrow ◄ button and the **Cancel** button simultaneously.

   b. Use the arrow buttons to select **Pick roller**, and then press OK.

      Press OK again to confirm that you want the roller to rotate.

   c. Listen for the roller to rotate. When the roller is done rotating, unplug the power cord and then place the power switch in the off position.

      △ **CAUTION:** It is important to place the power switch in the off position **after** unplugging the power cord so that the product power does not come on immediately when the power cord is plugged in again.

   d. Remove Tray 2.

   e. Perform the remaining steps in this procedure to remove the roller. After replacing the roller, plug the power cord into the product, and then use the power switch to turn the power on.

2. Carefully raise the front of the product.

⚠ **WARNING!** Do not place the product face-up resting on the rear cover and rear door. Excess toner might enter the laser/scanner assembly and contaminate the mirrors, causing print-quality problems. The laser/scanner is not a FRU. If the laser/scanner mirrors are contaminated, the entire product must be replaced.

△ **CAUTION:** The ADF and scanner cover are not captive and can open suddenly when the product is placed front-side face up. Always support the ADF and scanner cover before placing the product front-side face up.

Do not lift the product grasping the front door and Tray 2 cavity.

Figure 6-9 Remove the pickup roller (1 of 2)

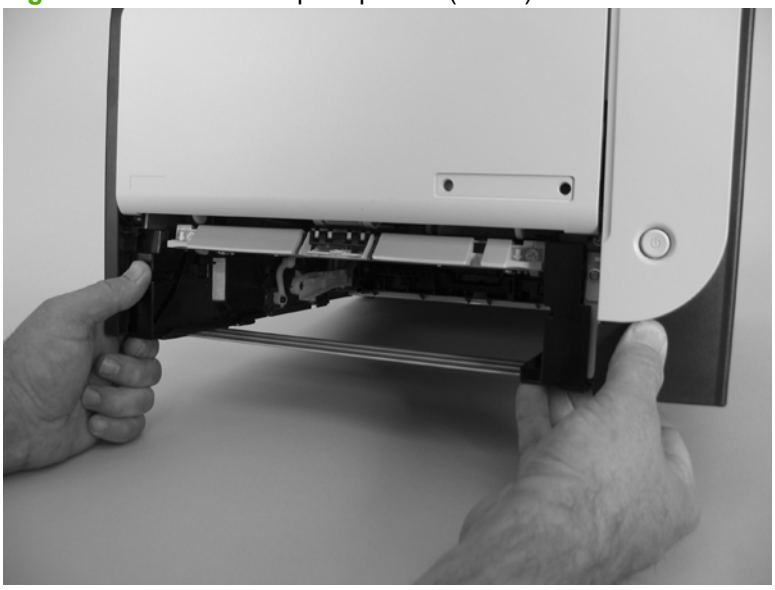

3. Use a pair of snap-ring pliers to release two locking tabs and remove the pickup roller.

△ **CAUTION:** Do not touch the spongy roller surface unless you are going to replace the roller. Skin oils on the roller can cause paper pickup problems.

NOTE: If you do not have a pair of snap-ring pliers, use your fingers to release the tabs.

Figure 6-10 Remove the pickup roller (2 of 2)

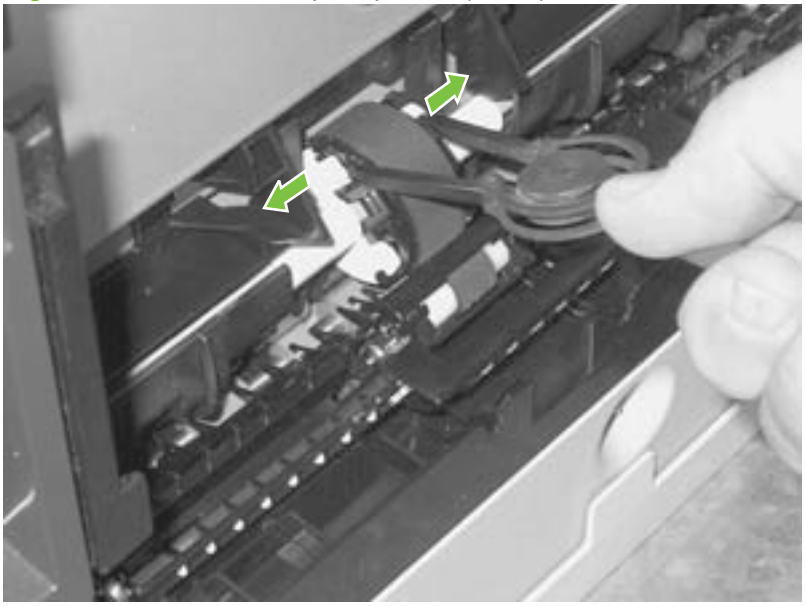

Separation roller (Trays 2 or 3)

△ **CAUTION:** Avoid touching the spongy roller surface unless you are going to replace the roller. Skin oils on the roller can cause paper pickup problems.

1. Remove Tray 2 (if installed), and then carefully raise the front of the product.

   ⚠ **WARNING!** Do not place the product face-up resting on the rear cover and rear door. Excess toner might enter the laser/scanner assembly and contaminate the mirrors, causing print-quality problems. The laser/scanner is not a FRU. If the laser/scanner mirrors are contaminated, the entire product must be replaced.

   △ **CAUTION:** Do not lift the product grasping the front door and Tray 2 cavity.

   Figure 6-11 Remove the pickup roller (1 of 3)

   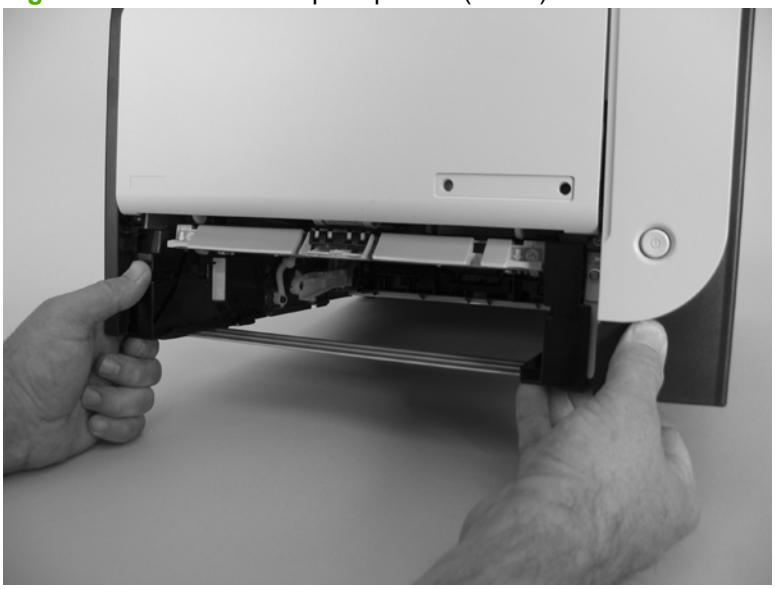

2. Release the two roller-cover locking pins, and then remove the cover.

   Figure 6-12 Remove the separation roller (2 of 3)

   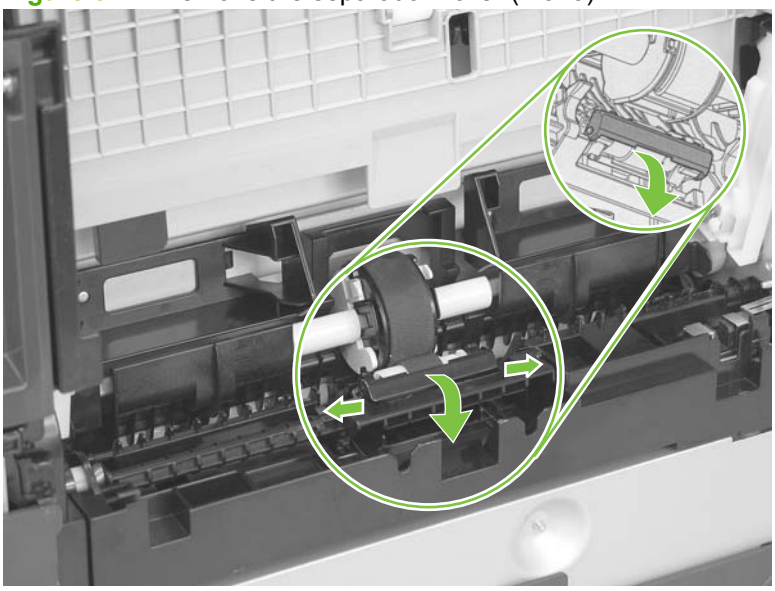

3. Release the roller holder to release the roller-locking pins. Remove the separation roller.

Figure 6-13 Remove the separation roller (3 of 3)

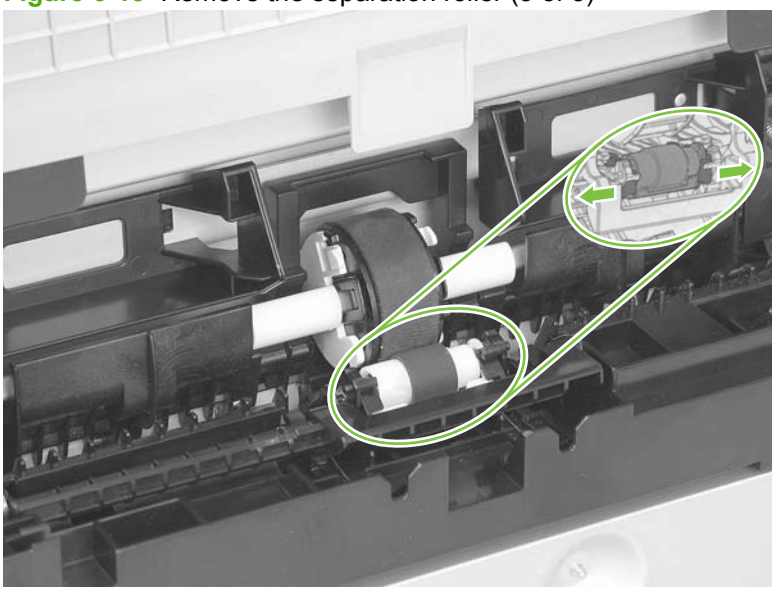

Reinstall the separation roller

1. Install the replacement separation roller.
2. Reinstall the separation roller cover on the locking pins, and then rotate it toward the roller until you hear it snap into place.

Figure 6-14 Reinstall the separation roller

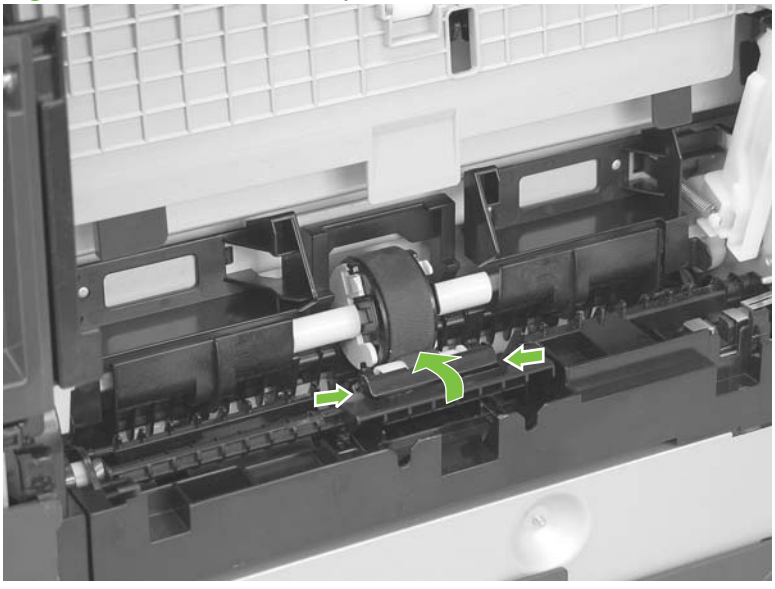

ADF pickup roller assembly

1. Open the ADF cover.
2. Disconnect one spring (callout 1).

Figure 6-15 Remove the ADF pickup roller assembly (1 of 2)

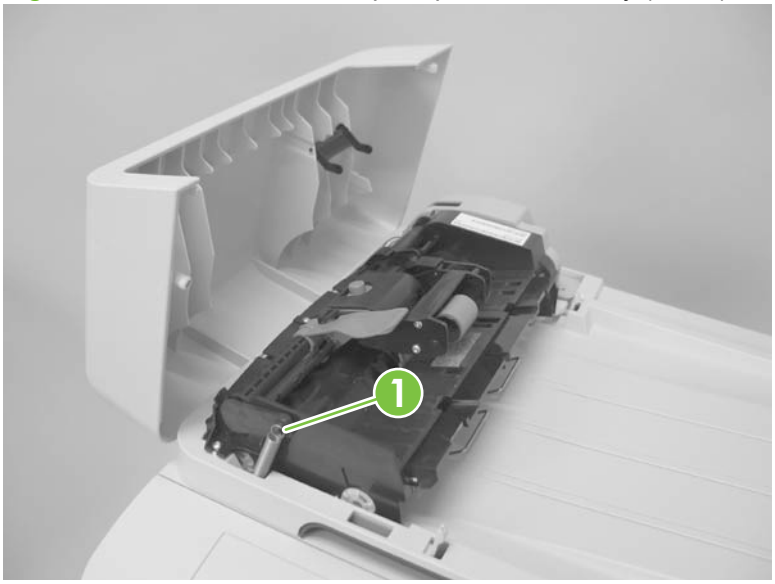

3. Lift up on the end of the assembly, and then slide it toward the control panel to remove it.

Figure 6-16 Remove the ADF pickup roller assembly (2 of 2)

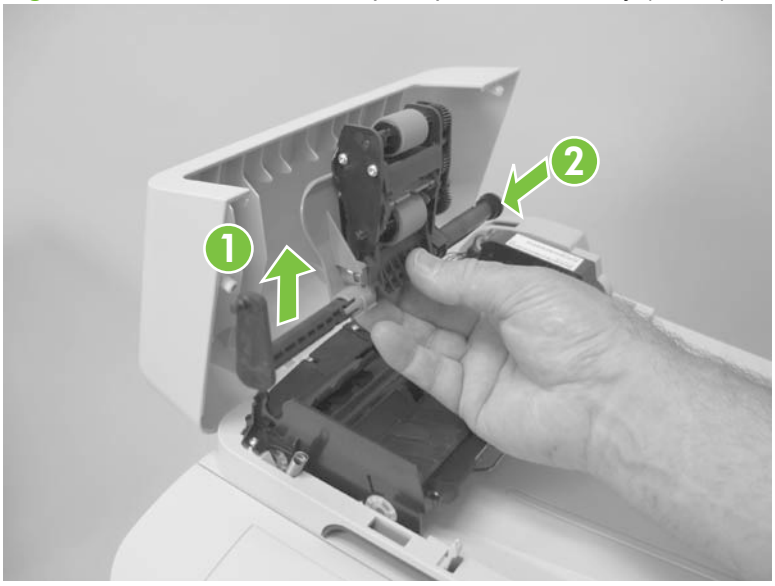

Paper-pickup roller (Tray 1)

The roller must be rotated into the service position to remove it.

△ **CAUTION:** Avoid touching the spongy roller surface unless you are going to replace the roller. Skin oils on the roller can cause paper pickup problems.

1. Turn the product on, and wait for it to reach the **Ready** state. Perform the following steps to rotate the roller to the service position.

   NOTE: If you have removed Tray 2 to service the product, reinstall the tray before turning the power on.

   TIP: The following steps rotate the engine paper-pickup roller *and* the Tray 1 paper-pickup roller into the service position.

   a. Open the **2ndry Service** menu by pressing the Left Arrow ◄ button and the **Cancel** button simultaneously.

   b. Use the arrow buttons to select **Pick roller**, and then press OK.

      Press OK again to confirm that you want the roller to rotate.

   c. Listen for the roller to rotate. When the roller is done rotating, unplug the power cord and then place the power switch in the off position.

      NOTE: Failure to unplug the product at this point will result in the roller being in the incorrect position for the repair procedure.

      △ **CAUTION:** It is important to place the power switch in the off position **after** unplugging the power cord so that the product power does not come on immediately when the power cord is plugged in again.

   d. Remove Tray 2.

   e. Perform the remaining steps in this procedure to remove the roller. After replacing the roller, plug the power cord into the product, and then use the power switch to turn the power on.

2. Lower the Tray 1 paper pickup assembly by pushing down on the edges of the assembly.

Figure 6-17 Remove the Tray 1 paper-pickup roller (1 of 3)

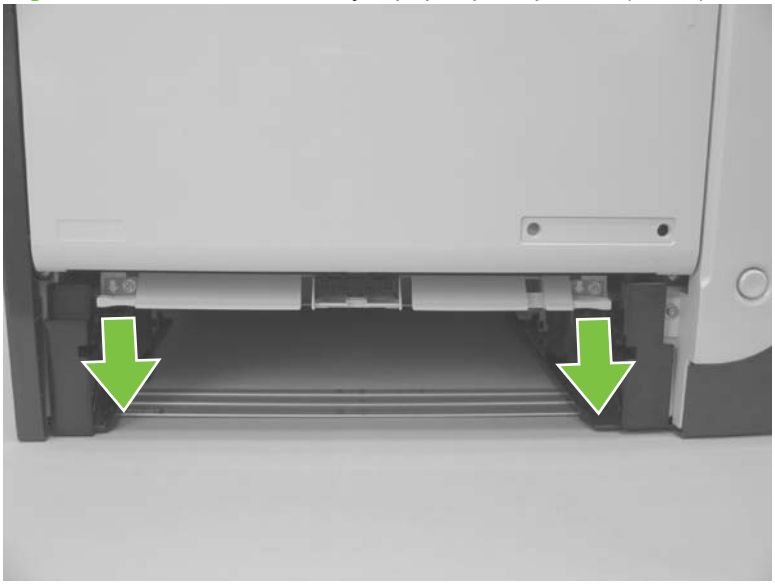

3. Carefully raise the front of the product.

⚠ **WARNING!** Do not place the product face-up resting on the rear cover and rear door. Excess toner might enter the laser/scanner assembly and contaminate the mirrors, causing print-quality problems. The laser/scanner is not a FRU. If the laser/scanner mirrors are contaminated, the entire product must be replaced.

△ **CAUTION:** Do not lift the product grasping the front door and Tray 2 cavity.

Figure 6-18 Remove the Tray 1 paper-pickup roller (2 of 3)

4. Release two tabs, and then rotate the roller away from the product to remove it.

Figure 6-19 Remove the Tray 1 paper-pickup roller (3 of 3)

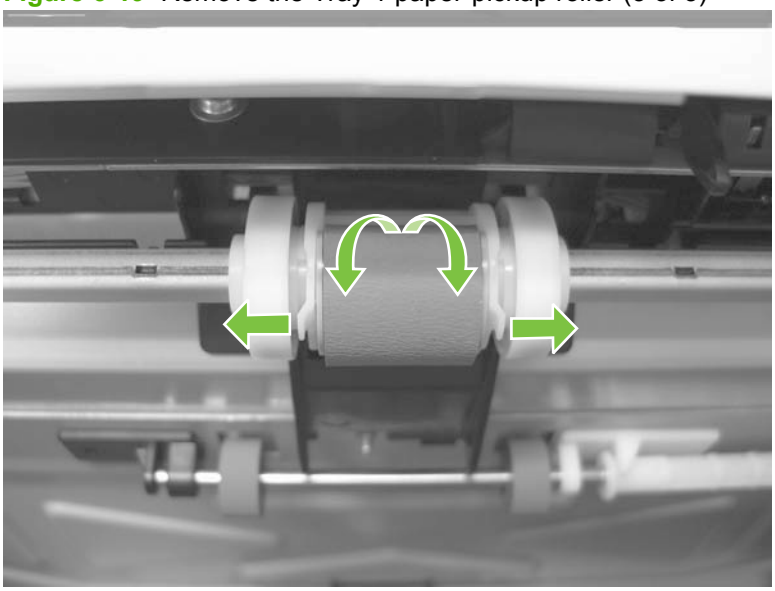

Separation pad (Tray 1)

△ **CAUTION:** Avoid touching the pad surface unless you are going to replace the pad. Skin oils on the pad can cause paper pickup problems.

1. Remove Tray 2 (if installed).
2. Lower the Tray 1 paper pickup assembly by pushing down on the edges of the assembly.

Figure 6-20 Remove the Tray 1 separation pad (1 of 2)

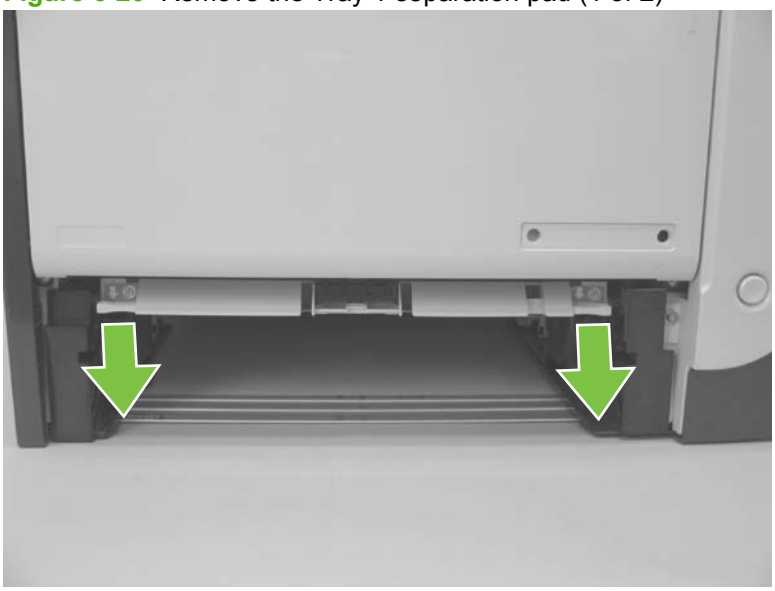

3. Release the retainer tabs, and then remove the separation pad from the base.

NOTE: The separation pad base can easily be dislodged when the pad is removed. If the base is dislodged, do not loose the spring under the base (it is not captive).

Figure 6-21 Remove the Tray 1 separation pad (2 of 2)

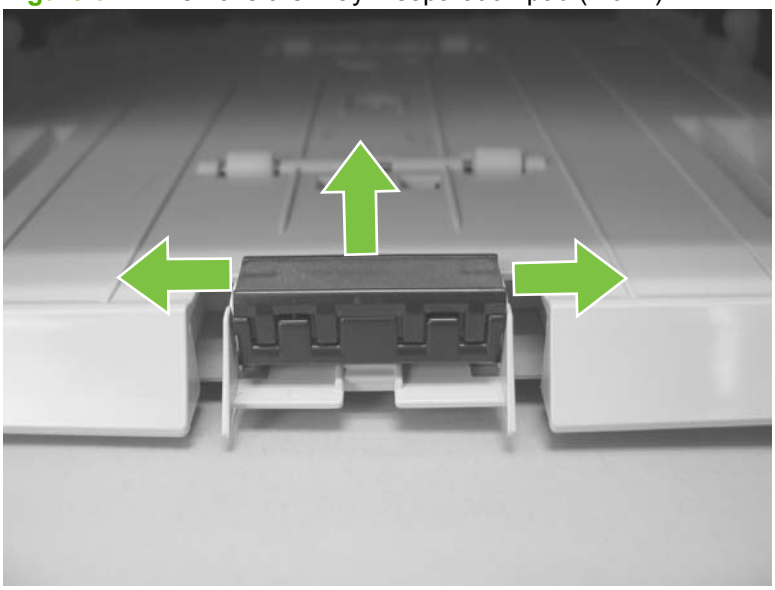

Components and major assemblies

Link guide

The link guide rarely fails and is not a FRU.

The link is attached to the paper guide (callout 1) and the rear door (simplex products; callout 2) or duplexing-feed guide assembly (duplex products; callout 3).

If the link-guide attachment at the rear door or duplexing-feed guide assembly fails, replace the appropriate component.

The interior paper guide is not replaceable. If the link-guide to paper guide attachment fails, you must replace the entire product.

Figure 6-22 Replace the link guide (simplex products)

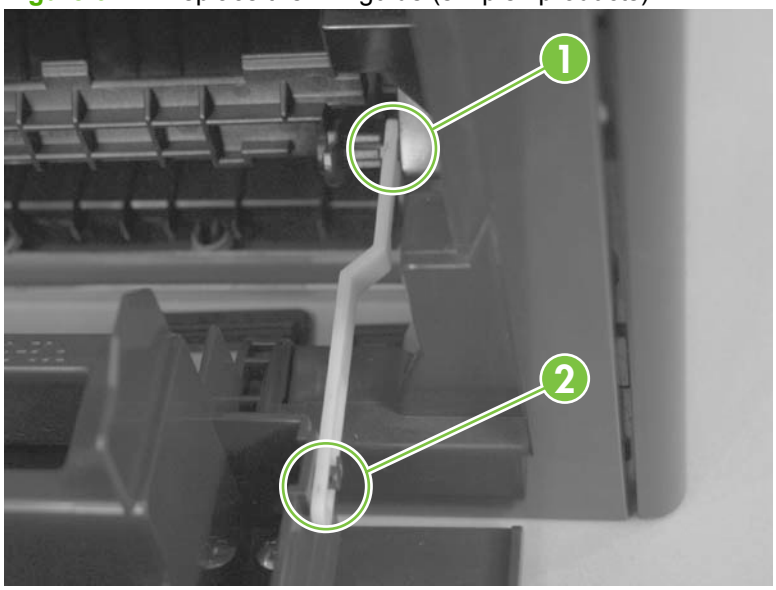

Figure 6-23 Replace the link guide (duplex products)

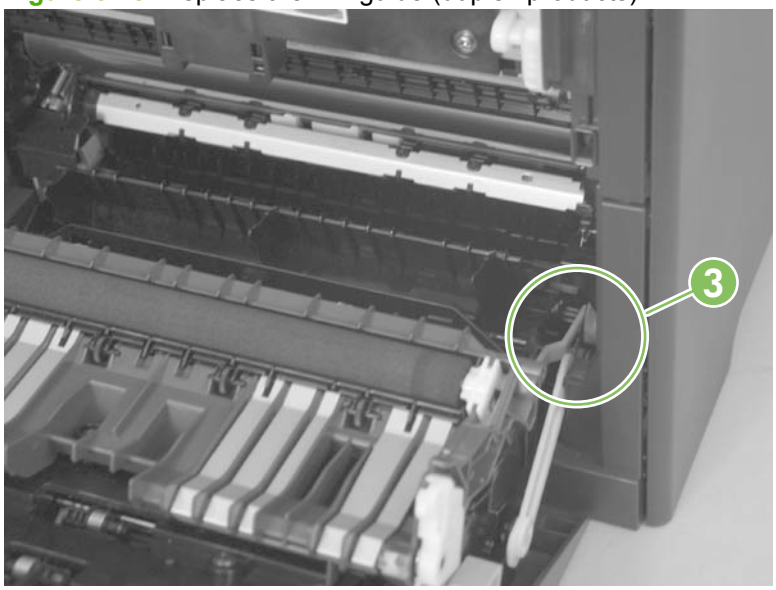

ADF input tray

Rotate the ADF input tray toward the ADF to release it, and then remove the tray.

Figure 6-24 Remove the ADF input tray

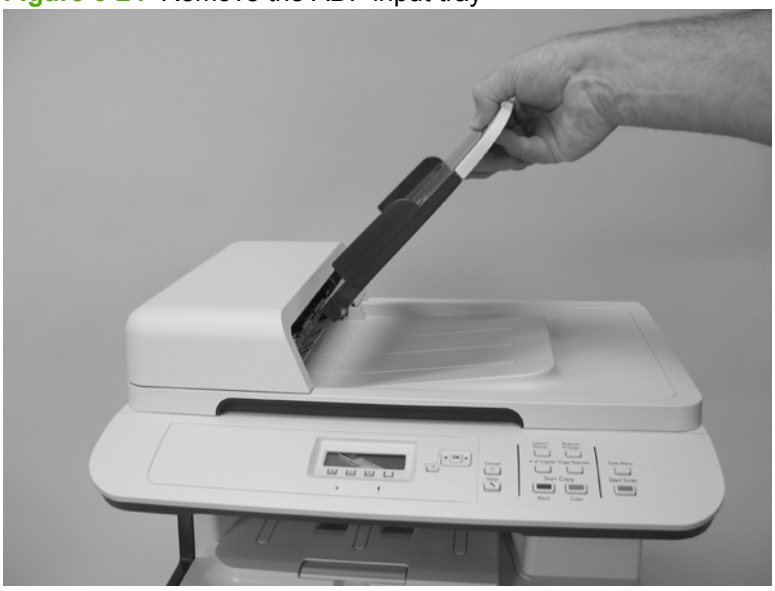

DIMM cover

1. Open the DIMM cover.
2. Lift the cover up to release it, and then remove the cover.

Figure 6-25 Remove the DIMM cover

Print-cartridge drawer

1. Open the front door.
2. Partially pull out the print-cartridge drawer, and then use a small flat blade screwdriver to release one tab (callout 1) on the left side of the product.

   Figure 6-26 Remove the print-cartridge drawer (1 of 3)

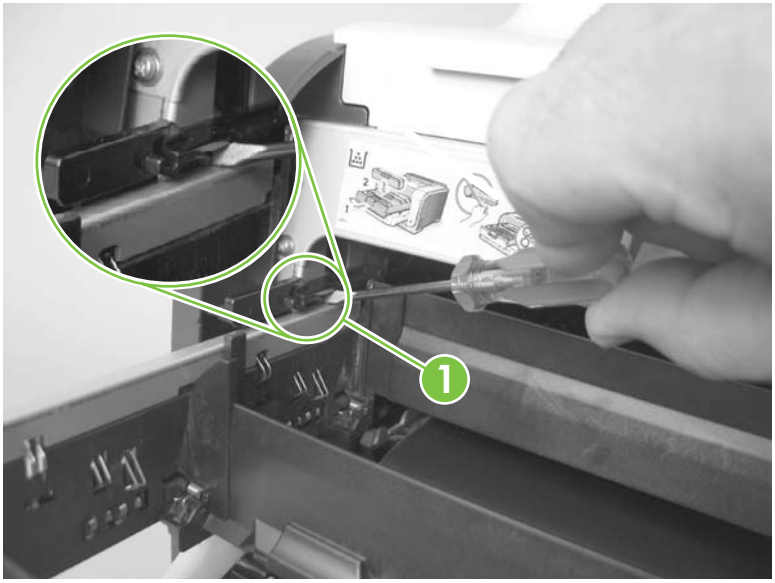

3. Carefully rotate the print-cartridge drawer toward the right side of the product to release it.

   Figure 6-27 Remove the print-cartridge drawer (2 of 3)

4. Pull the print-cartridge drawer out of the product to remove it.

Figure 6-28 Remove the print-cartridge drawer (3 of 3)

Intermediate transfer belt (ITB)

1. Remove the print-cartridge drawer. See Print-cartridge drawer on page 141.
2. Open the front door, and then remove two screws (callout 1).

Figure 6-29 Remove the ITB (1 of 6)

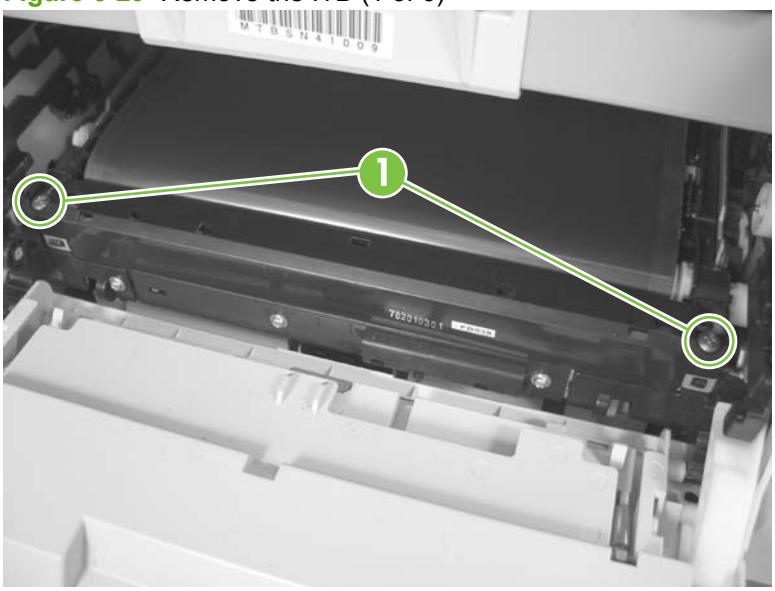

3. Carefully rotate the color-misregistration sensor away from the ITB.

△ **CAUTION:** The sensor is still attached to the product and cannot be completely removed.

Figure 6-30 Remove the ITB (2 of 6)

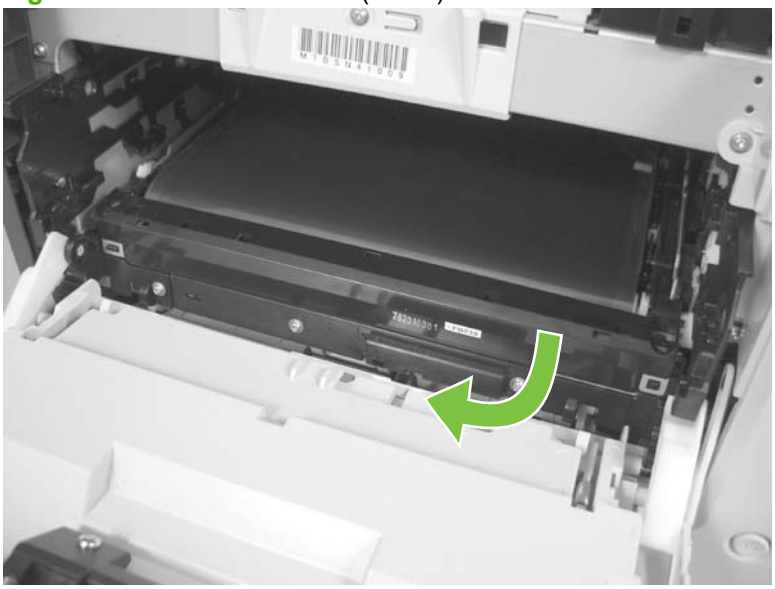

4. Disconnect one connector (callout 2).

Figure 6-31 Remove the ITB (3 of 6)

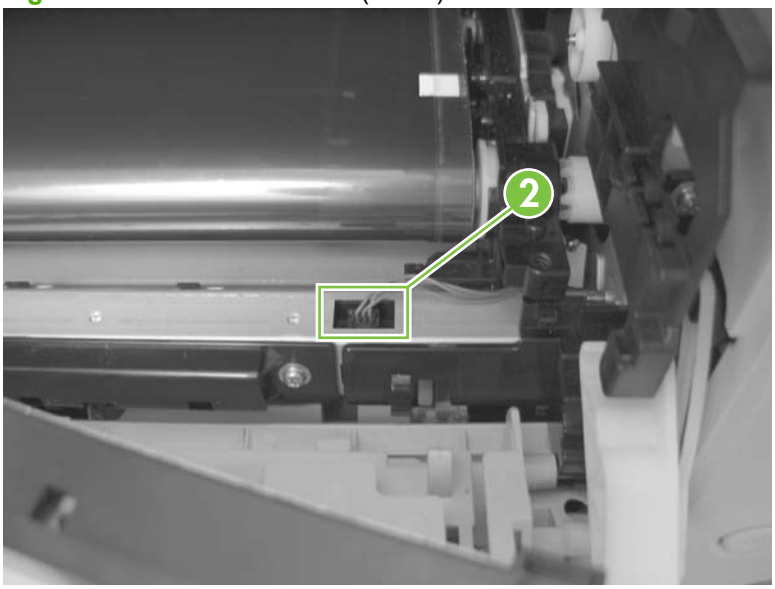

5. Carefully lift up on the front of the ITB to release it.

△ **CAUTION:** Avoid touching the black plastic transfer belt. Skin oils on the belt might cause print-quality problems. Lift the ITB as shown below, by using the hard-plastic edges of the ITB.

Figure 6-32 Remove the ITB (4 of 6)

6. Open the rear door, and carefully lift up on the sheet-metal portion (callout 3) of the ITB to release it.

△ **CAUTION:** Avoid touching the black plastic transfer belt. Skin oils on the belt might cause print-quality problems.

NOTE: You might need to reach in through the front door and support the front portion of the ITB to keep it from falling back into place as you perform this step.

Figure 6-33 Remove the ITB (5 of 6)

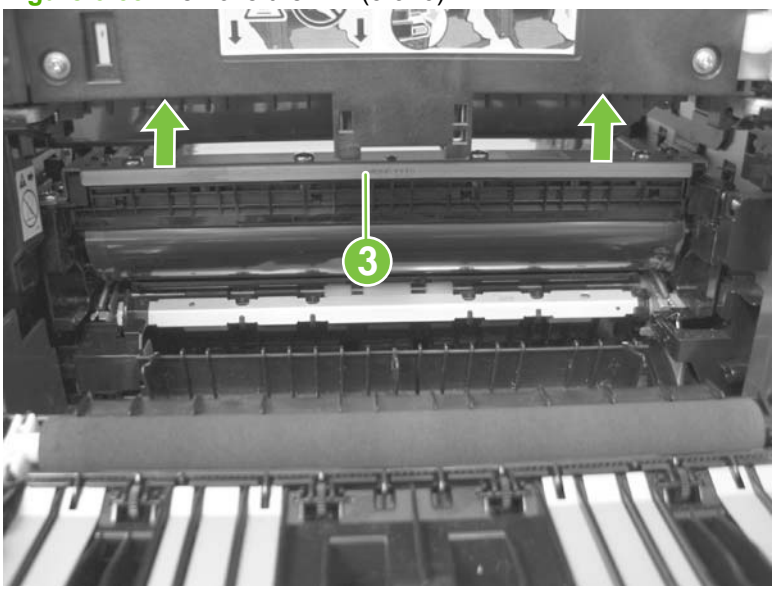

7. Carefully pull the ITB straight out of the product to remove it.

△ **CAUTION:** Avoid touching the black plastic transfer belt. Skin oils on the belt might cause print-quality problems. Handle the ITB as shown below.

Figure 6-34 Remove the ITB (6 of 6)

Reinstall the ITB

Use this procedure to verify that the ITB is correctly reinstalled.

1. Use the control panel to print the diagnostics pages. See Diagnostics pages on page 253.
2. Verify that rows **one** through **four**, columns **A** through **I** (callout 1) contain hexadecimal numbers.

   If these rows and columns are all zero, ensure that the calibration sensor was correctly reinstalled. The sensor must be correctly positioned and fit securely against the chassis before the mounting screws are installed. See Figure 6-29 Remove the ITB (1 of 6) on page 142 and Figure 6-30 Remove the ITB (2 of 6) on page 143.

Figure 6-35 Reinstall the ITB

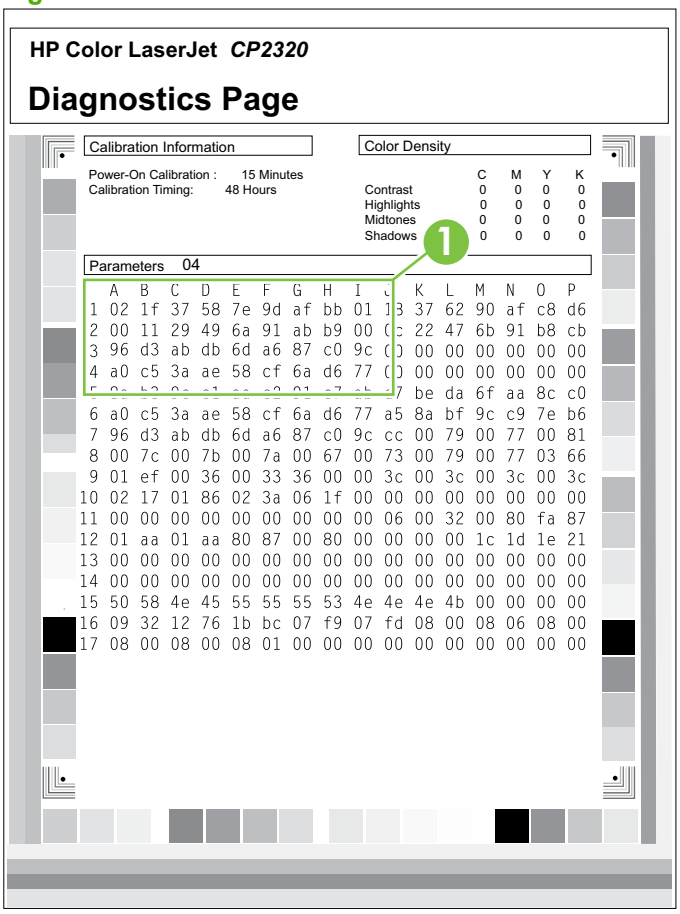

Motors (drum motor and developer motor)

This procedure can be used to remove the drum motor (M1) or the developer motor (M2). HP does not recommend removing both of the motors at the same time.

1. Remove the right cover. See Right cover on page 156.
2. Disconnect one connector (callout 1) for motor M1 or motor M2.

NOTE: The drum motor (callout 2) is motor M1. The developer motor (callout 3) is motor M2.

Figure 6-36 Remove motor M1 and motor M2 (1 of 3)

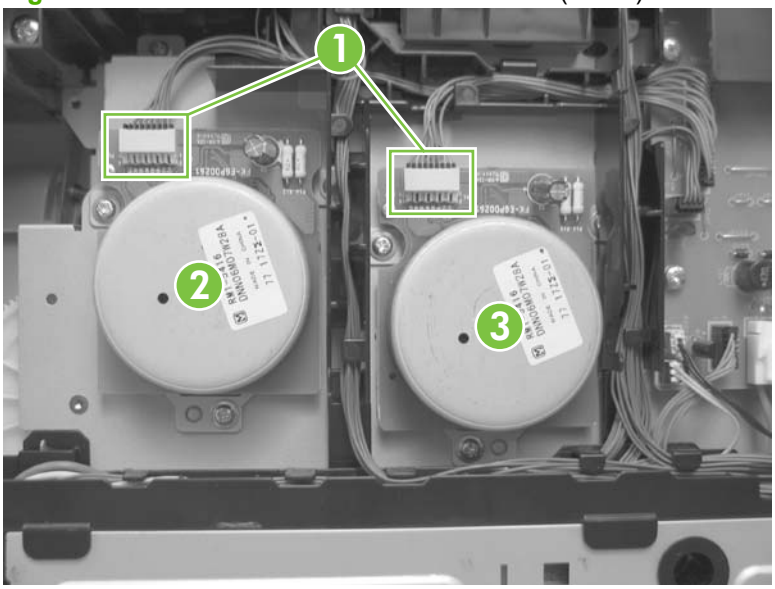

3. Release the wire harnesses from the retainer, and then release one tab (callout 4). Move the retainer (callout 5) to one side (you will not be able to completely remove the retainer from the product).

Figure 6-37 Remove motor M1 and motor M2 (2 of 3)

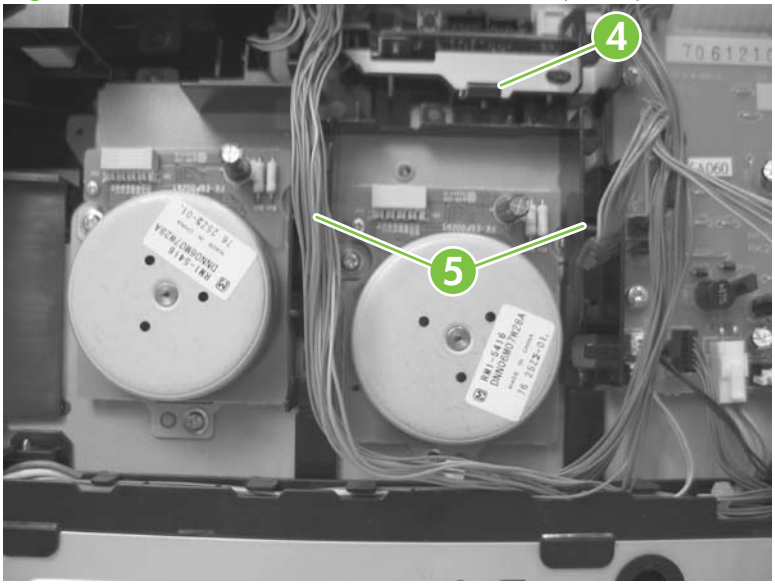

4. Remove three screws (callout 6) to remove motor M1, or remove three screws (callout 7) to remove motor M2.

Figure 6-38 Remove motor M1 and motor M2 (3 of 3)

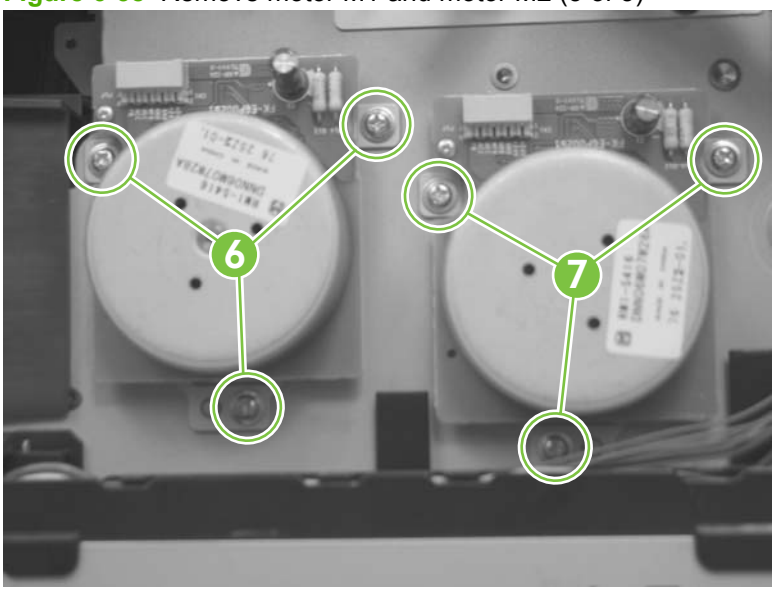

Intermediate PCA

1. Remove the right cover. See Right cover on page 156.
2. Disconnect all of the connectors (callout 1) on the PCA and one FFC (callout 2).

Figure 6-39 Remove the Intermediate PCA (1 of 2)

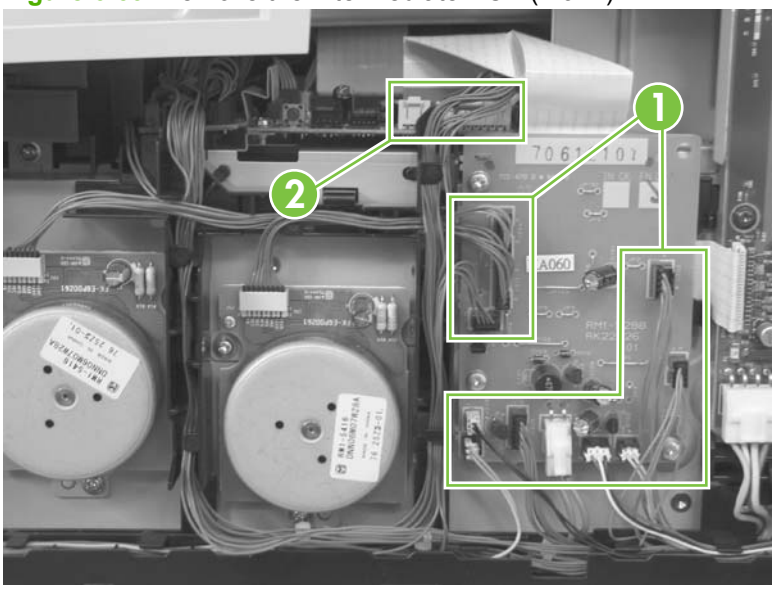

3. Remove three screws (callout 3) , and then remove the intermediate PCA.

Figure 6-40 Remove the Intermediate PCA (2 of 2)

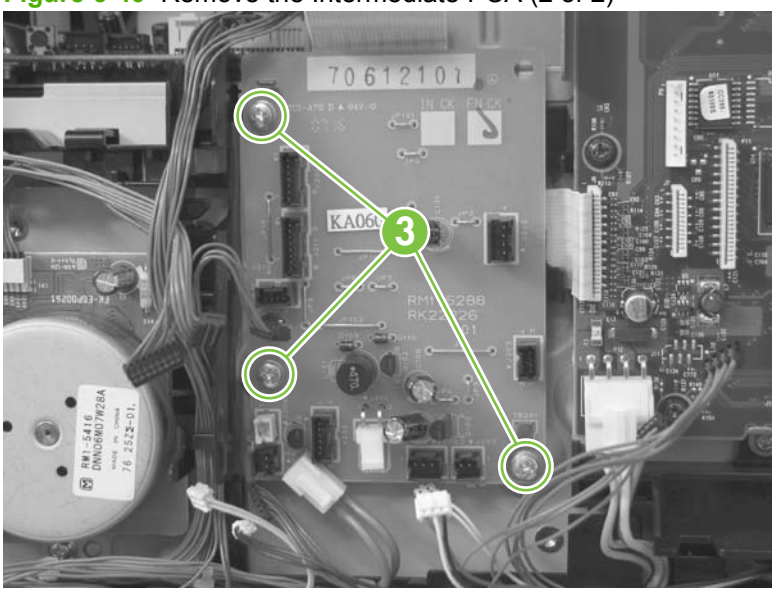

Paper-feed guide assembly

NOTE: A simplex model is shown below. Duplex and simplex models use the same paper-feed guide assembly, and the removal and replacement processes are identical.

1. Release one screw (callout 1).

Figure 6-41 Remove the feed assembly (1 of 2)

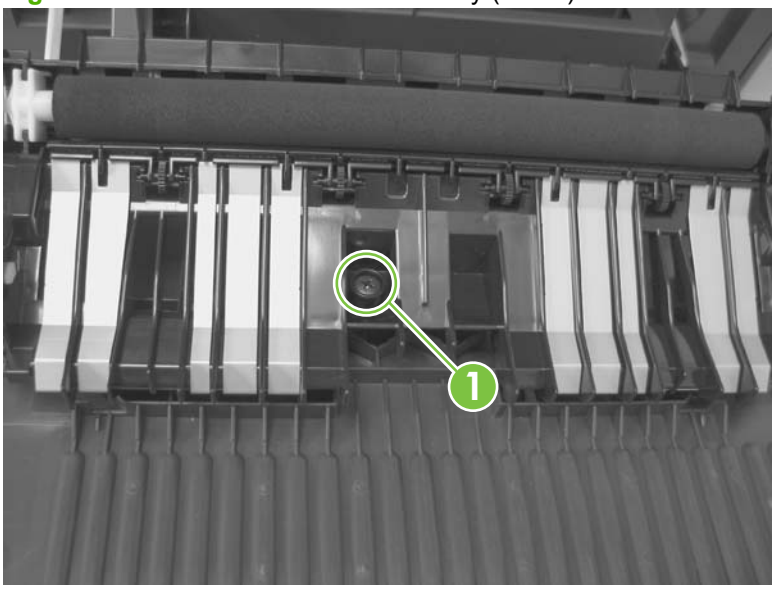

2. Remove the feed assembly.

TIP: When the feed assembly is correctly reinstalled, the assembly will be able to move in relation to the door. It should not be secured firmly to the door.

Figure 6-42 Remove the feed assembly (2 of 2)

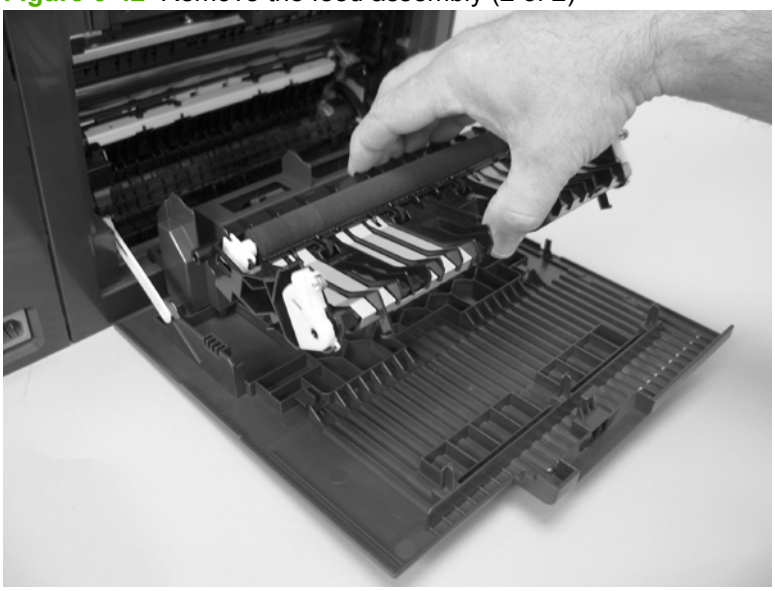

Rear-door stopper and link caps (simplex product)

1. Open the rear door.
2. Use a pair of needle-nose pliers to release two tabs, and then remove the link cap.

   Figure 6-43 Remove the Rear-door stopper and link caps (simplex product) (1 of 2)

   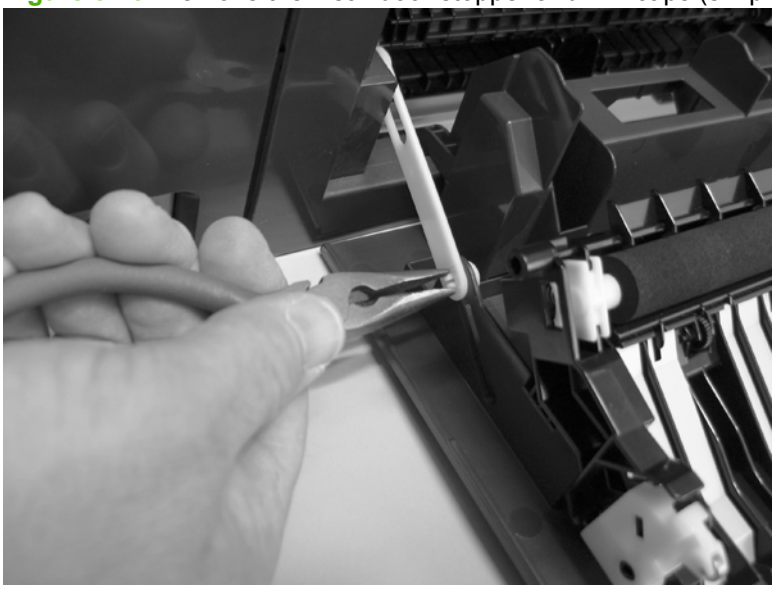

3. Use a small flat blade screwdriver to carefully remove the remaining link cap, and then remove the Rear-door stopper.

   Figure 6-44 Remove the Rear-door stopper and link cap (simplex product) (2 of 2)

   

Rear door (simplex product)

1. Open the rear door.
2. Use a pair of needle-nose pliers to release two tabs, and then remove the link cap.

Figure 6-45 Remove the rear door (simplex product) (1 of 4)

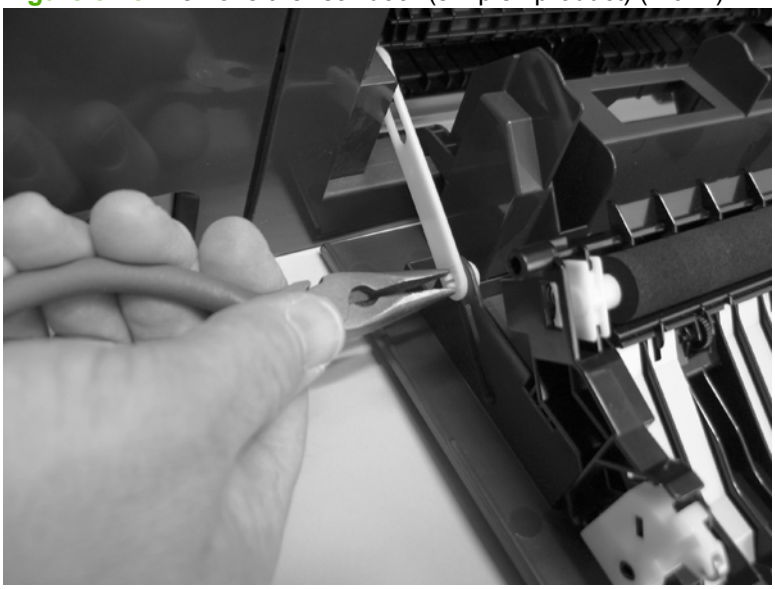

3. Remove four screws (callout 1).

Figure 6-46 Remove the rear door (simplex product) (2 of 4)

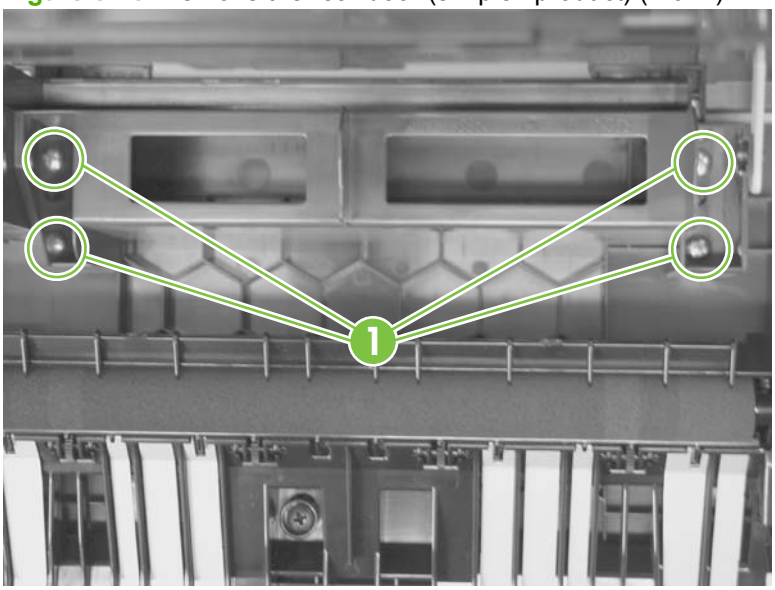

4. Before you remove the rear door, take note of the alignment pins on the door.

Figure 6-47 Remove the rear door (simplex product) (3 of 4)

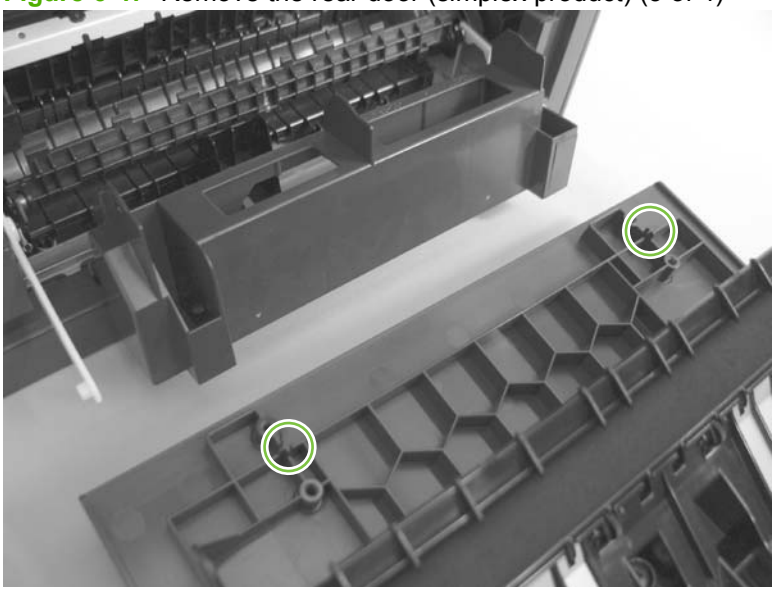

5. Remove the rear door.

Figure 6-48 Remove the rear door (simplex product) (4 of 4)

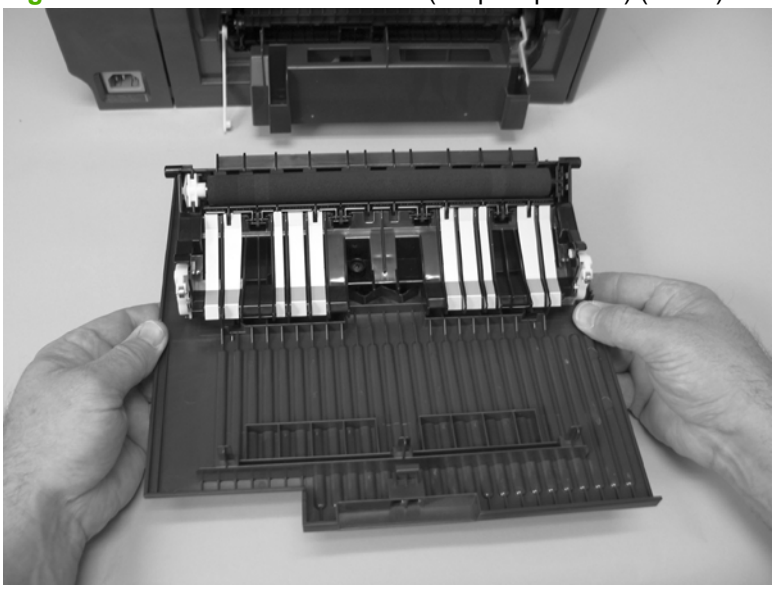

Rear door (duplex product)

1. Open the rear door.
2. Use the green handle to close the duplex-feed assembly.

Figure 6-49 Remove the rear door (duplex product) (1 of 4)

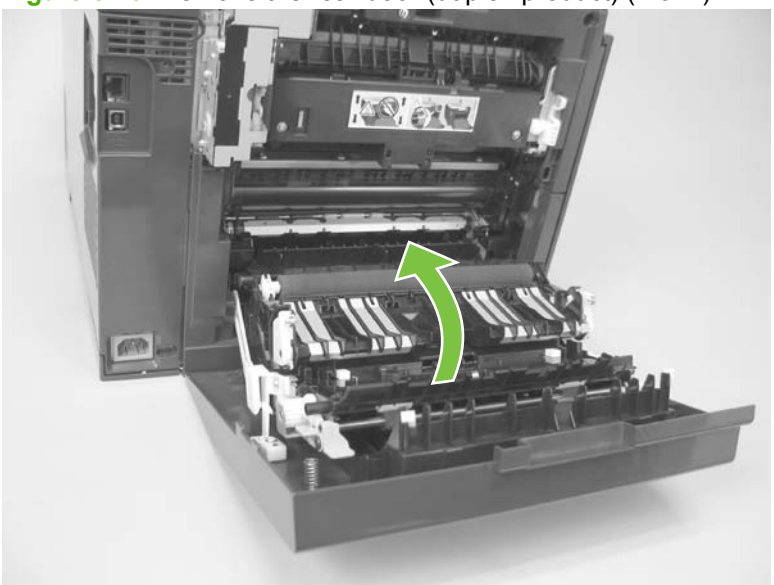

3. Remove two screws (callout 1).

Figure 6-50 Remove the rear door (duplex product) (2 of 4)

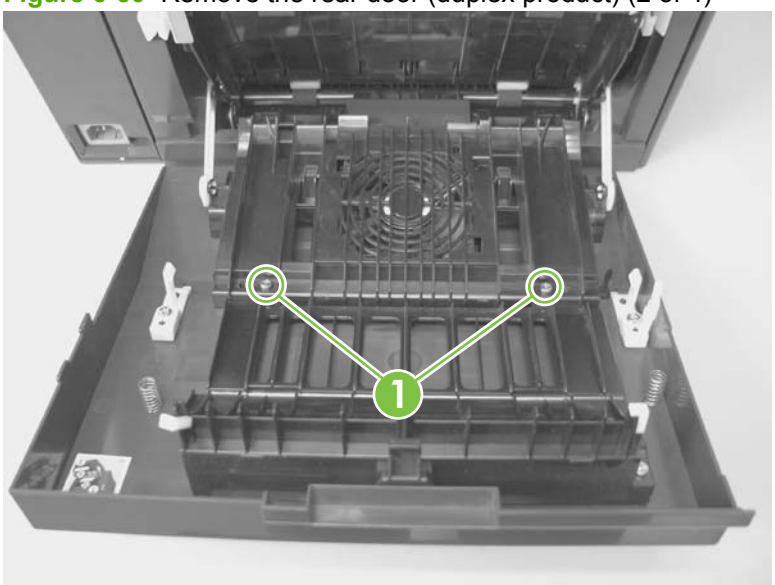

4. Before you remove the rear door, take note of the mounting tabs on the door.

Figure 6-51 Remove the rear door (duplex product) (3 of 4)

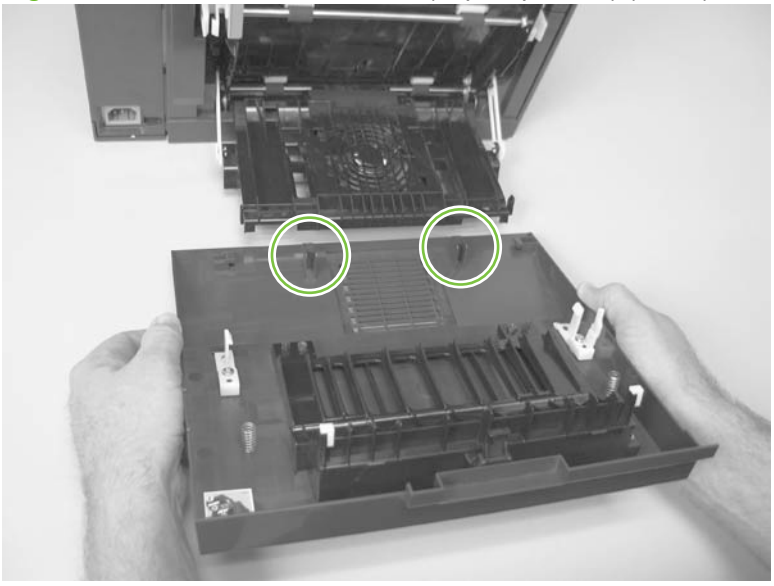

5. Slide the door away from the product to release two tabs, and then remove the door.

Figure 6-52 Remove the rear door (duplex product) (4 of 4)

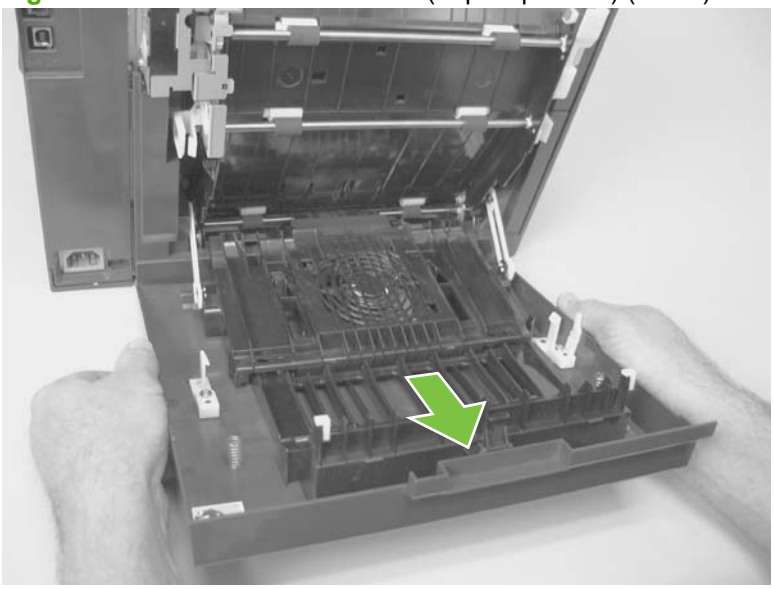

Right cover

NOTE: For duplex products, open the rear door.

1. Remove three screws (callout 1).

Figure 6-53 Remove the right cover (1 of 3)

2. Slide the right cover toward the back of the product.

Figure 6-54 Remove the right cover (2 of 3)

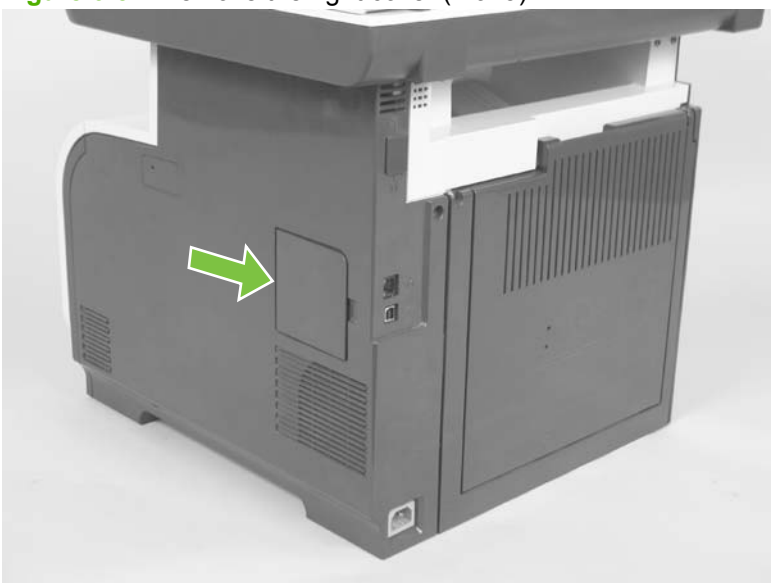

3. Remove the right cover.

Figure 6-55 Remove the right cover (3 of 3)

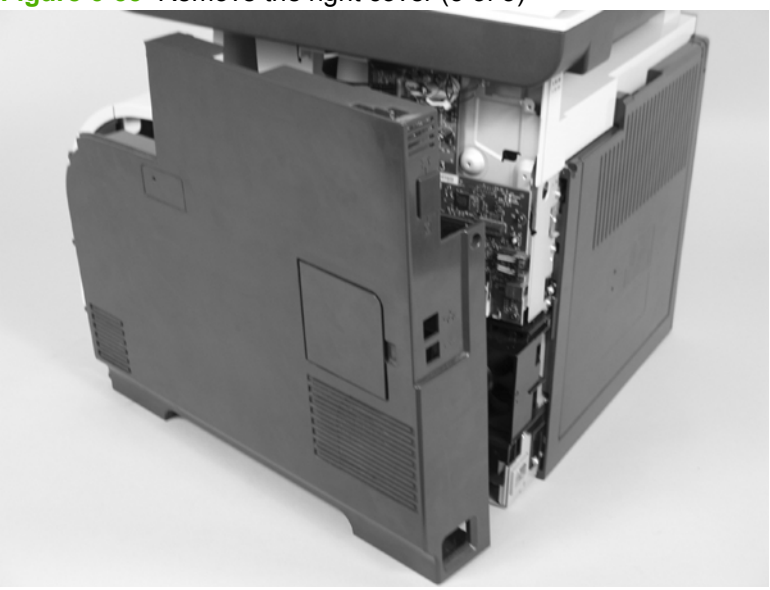

Formatter PCA and fax PCA

Special considerations

WARNING! Do not install a *replacement* formatter PCA and DC controller PCA at the same time.

The formatter PCA and the DC controller PCA store important product configuration information (NVRAM data) that is lost if both PCAs are replaced at the same time. When the product power is turned on, the DC controller restores the NVRAM data on the replacement formatter.

Replacing both the formatter and the DC controller at the same time will result in severe print-quality problems.

NOTE: The base model does not have a fax card installed.

Replacing the formatter PCA before the DC controller PCA

Use the following procedure if you need to install a replacement formatter PCA *and* a replacement DC controller.

NOTE: If you are only installing a replacement formatter PCA, go to Remove the formatter PCA and fax PCA on page 158.

1. Install a replacement formatter PCA.
2. Turn the product on, and wait for the print-cartridge volume indicators to appear on the control-panel display.

   NOTE: This allows important product information to be written to the replacement formatter PCA.

3. Turn the product off.
4. Install a replacement DC controller. See DC controller PCA on page 161.
5. Turn the product on.

Remove the formatter PCA and fax PCA

CAUTION: Do not bend or fold the flat flexible cables (FFCs) during removal or installation. Also, do not straighten pre-folds in the FFCs. You *must* make sure that all FFCs are fully seated in their connectors. Failure to fully seat an FFC into a connector can cause a short circuit in a PCA.

ESD Some parts are sensitive to electrostatic discharge (ESD). Always perform service work at an ESD-protected workstation or mat. If an ESD workstation or mat is not available, ground yourself by touching the sheet-metal chassis *before* touching an ESD-sensitive part.

NOTE: The base model does not have a fax PCA.

1. Remove the right cover. See Right cover on page 156.

2. Disconnect all of the connectors (callout 1).

Figure 6-56 Remove the formatter (1 of 4; base model)

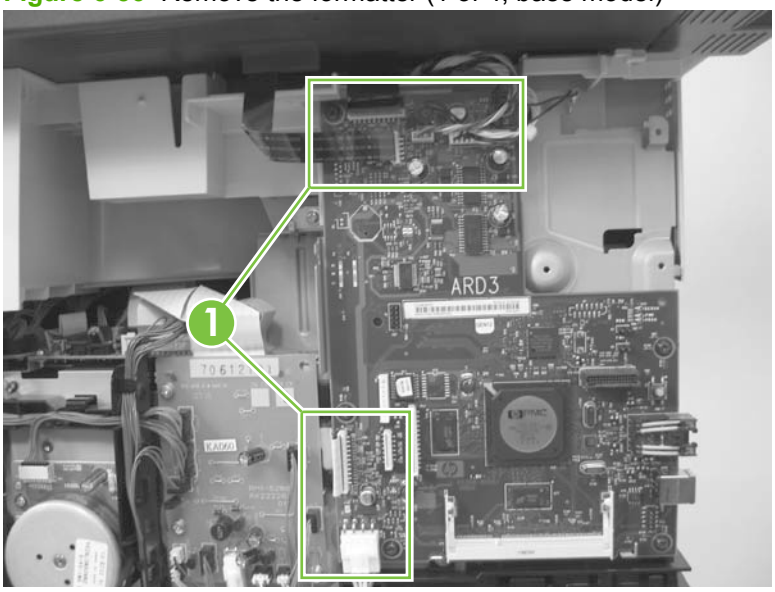

Figure 6-57 Remove the formatter (2 of 4; fax model)

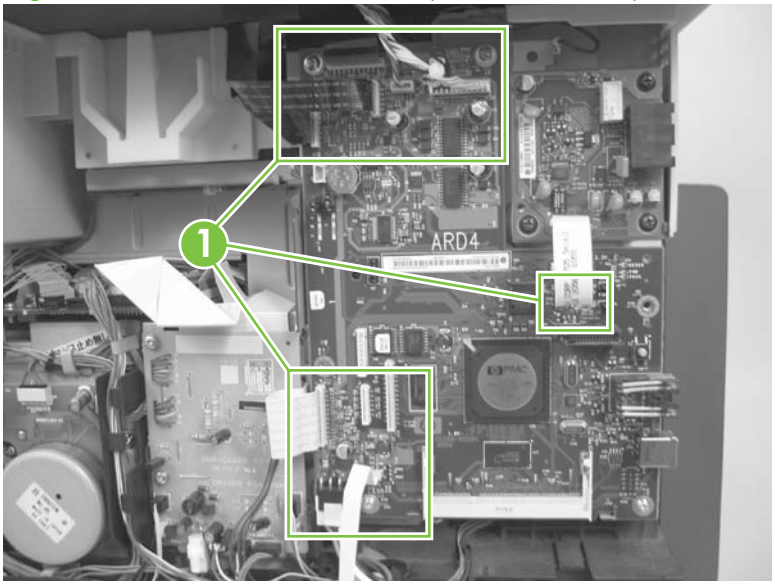

3. Remove six screws (callout 2) for the base model or nine screws (callout 3) for the fax model, and then remove the formatter PCA and the fax PCA.

NOTE: The base model does not have a fax PCA.

Figure 6-58 Remove the formatter (3 of 4; base model)

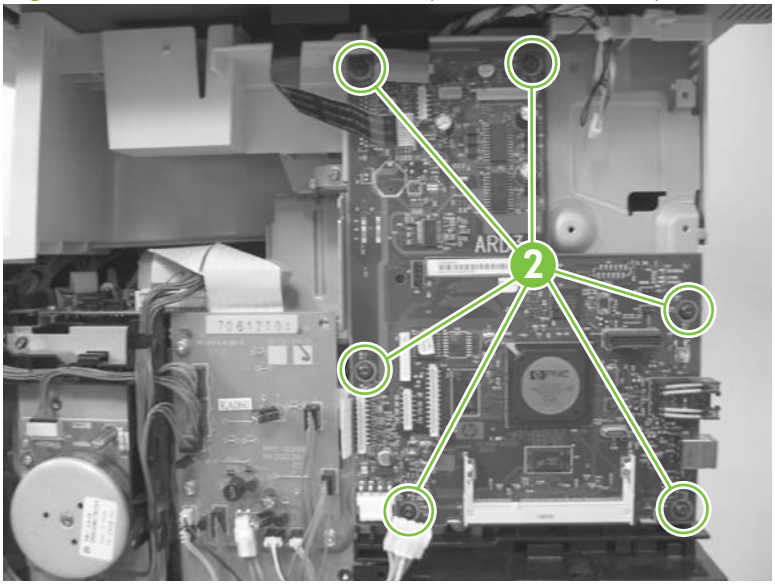

Figure 6-59 Remove the formatter (4 of 4; fax model)

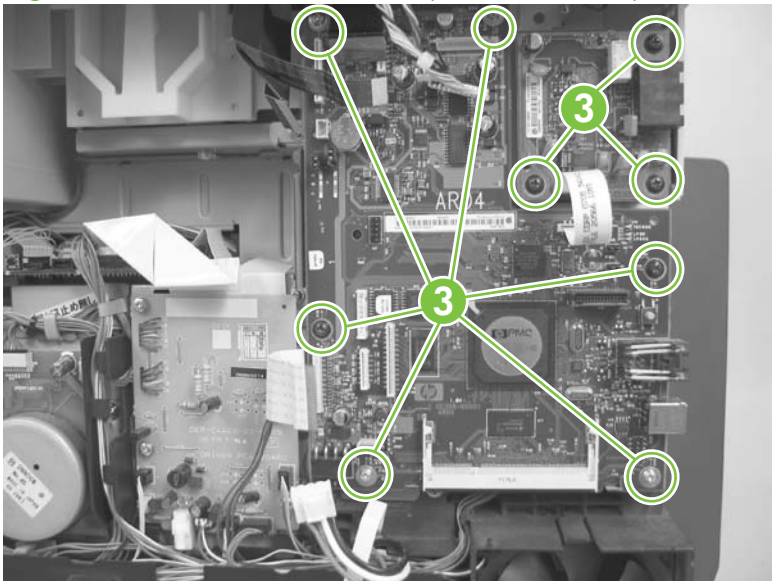

DC controller PCA

Special considerations

WARNING! Do not install a *replacement* formatter PCA and a *replacement* DC controller PCA at the same time.

The formatter PCA and the DC controller PCA store important product configuration information (NVRAM data) that is lost if both PCAs are replaced at the same time. When the product power is turned on, the formatter restores the NVRAM data to a replacement DC controller.

Replacing both the DC controller and the formatter at the same time will result in severe print-quality problems.

Replacing the DC controller PCA before the formatter PCA

Use the following procedure if you need to install a replacement DC controller *and* a replacement formatter PCA.

NOTE: If you are only installing a replacement DC controller PCA, go to Remove the DC controller PCA on page 161.

1. Install a replacement DC controller PCA.
2. Turn the product on, and wait for the print-cartridge volume indicators to appear on the control-panel display.

   NOTE: This allows important product information to be written to the replacement DC controller PCA.

3. Turn the product off.
4. Install a replacement formatter PCA. See Formatter PCA and fax PCA on page 158.
5. Turn the product on.

Remove the DC controller PCA

CAUTION: Do not bend or fold the flat flexible cables (FFCs) during removal or installation. Also, do not straighten pre-folds in the FFCs. You *must* make sure that all FFCs are fully seated in their connectors. Failure to fully seat an FFC into a connector can cause a short circuit in a PCA.

Some parts are sensitive to electrostatic discharge (ESD). Always perform service work at an ESD-protected workstation or mat. If an ESD workstation or mat is not available, ground yourself by touching the sheet-metal chassis *before* touching an ESD-sensitive part.

1. Remove the following components:
   - Right cover. See Right cover on page 156.
   - Scanner assembly. See Scanner assembly on page 163.
   - Upper cover. See Upper-cover assembly on page 181.

2. Disconnect all of the connectors.

NOTE: The DC controller is located along the top right of the product.

Figure 6-60 Remove the DC controller PCA (1 of 2)

3. Remove four screws (callout 1) and then remove the DC controller PCA.

Figure 6-61 Remove the DC controller PCA (2 of 2)

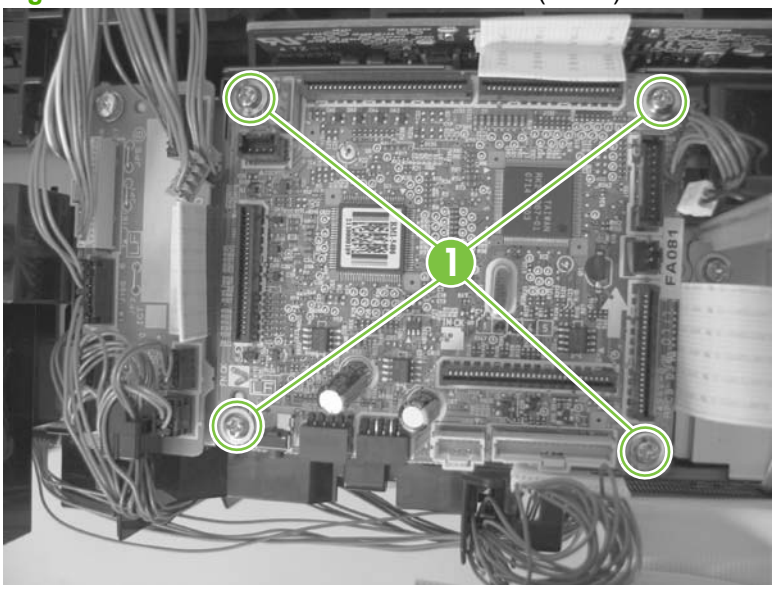

Scanner assembly

1. Remove the right cover. See Right cover on page 156.
2. Disconnect three FFCs (callout 1) and three connectors (callout 2).

NOTE: The base model has two FFCs and three connectors

Figure 6-62 Remove the scanner assembly (1 of 4)

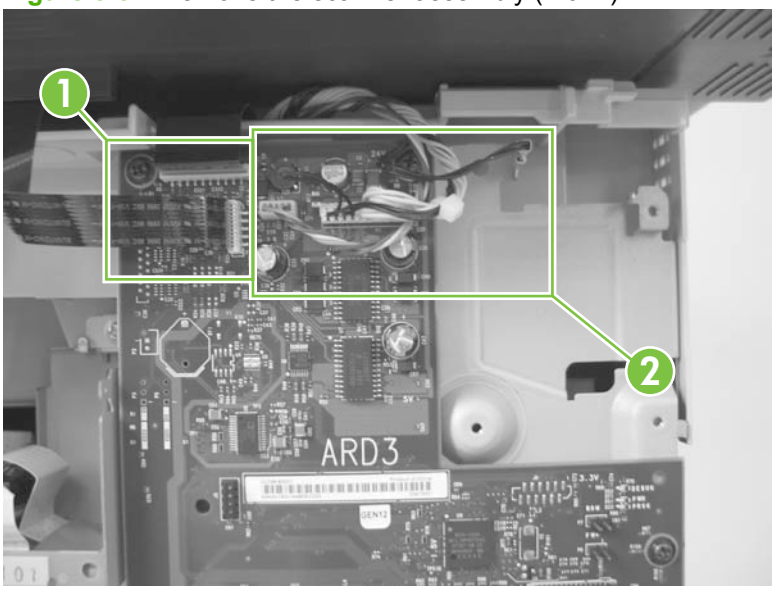

3. Remove four screws (callout 3).

Figure 6-63 Remove the scanner assembly (2 of 4)

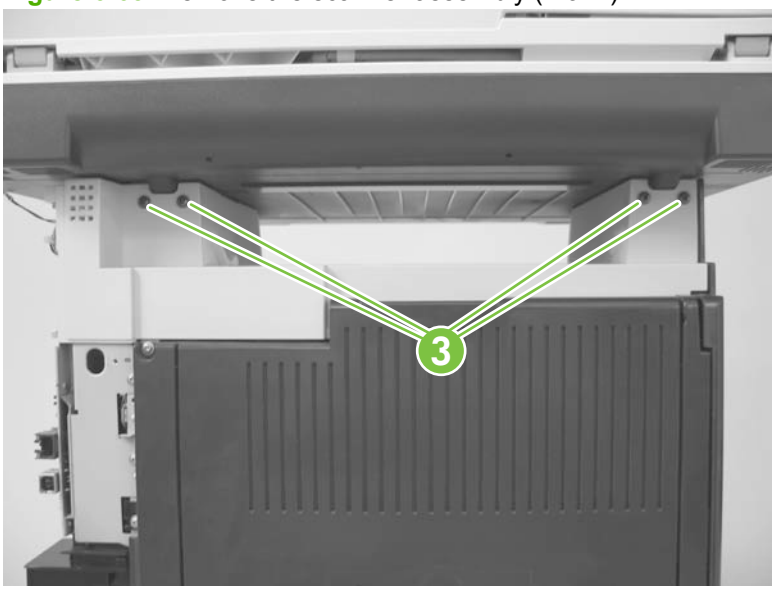

4. Slightly lift up the back of the scanner, and then slide it toward the front of the product.

Figure 6-64 Remove the scanner assembly (3 of 4)

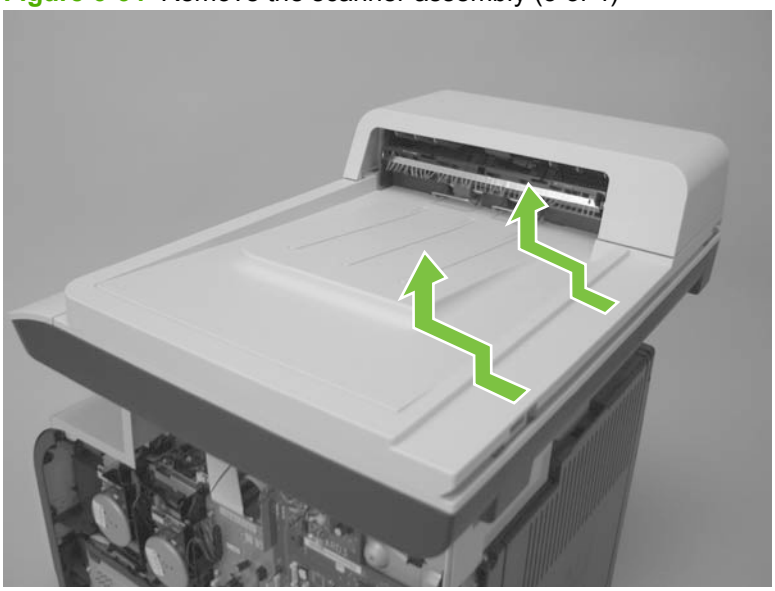

5. Lift the scanner straight up and off of the product.

Figure 6-65 Remove the scanner assembly (4 of 4)

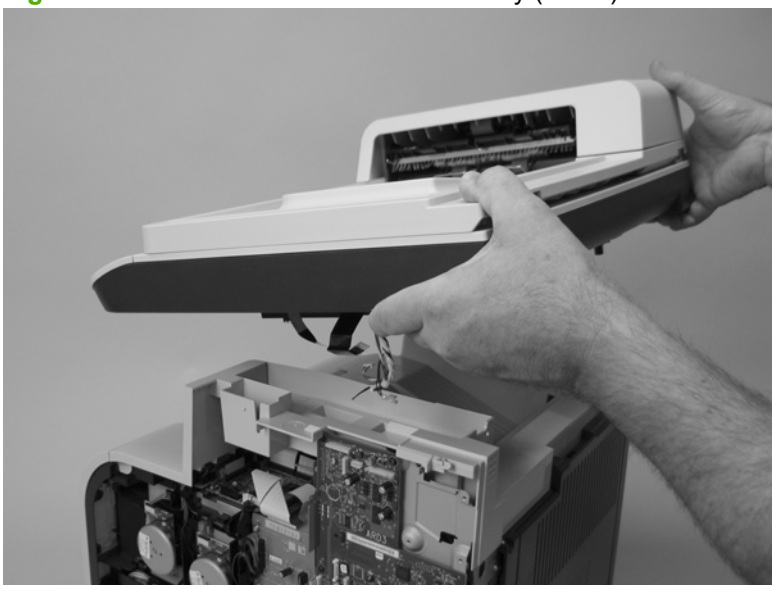

Rear-upper cover (duplex product)

1. Open the rear cover.
2. Remove two screws (callout 1).

Figure 6-66 Remove the rear-upper cover (1 of 2)

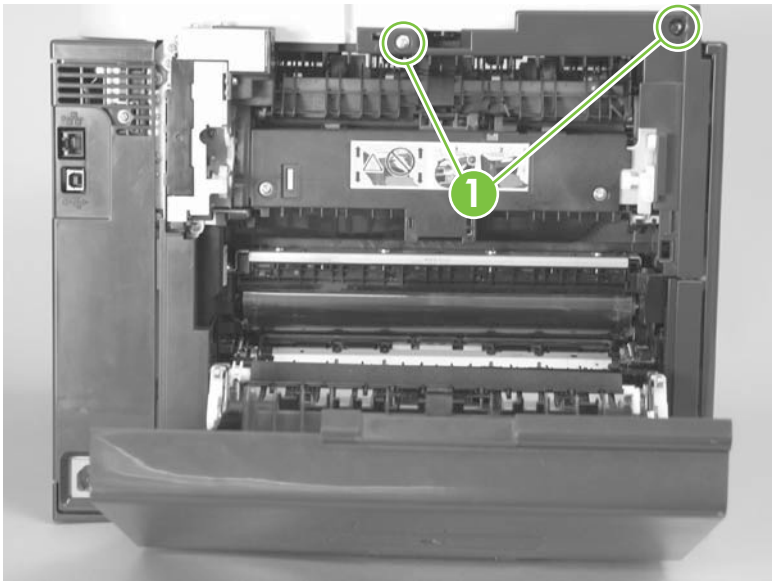

3. Slightly separate the cover from the product, and then rotate the cover down and then away from the product to remove it.

Figure 6-67 Remove the rear-upper cover (2 of 2)

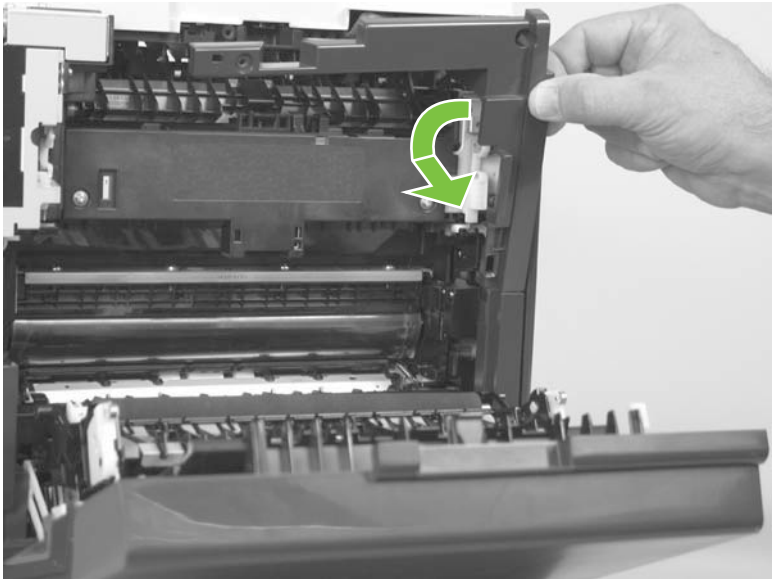

Rear cover and feed guide (simplex product)

1. Remove the following components:
   - Rear-door stopper. See Rear-door stopper and link caps (simplex product) on page 151.
   - Rear door. See Rear door (simplex product) on page 152.
   - Right cover. See Right cover on page 156.
2. Carefully release the link guide from the pivot pin on the feed guide.

   Figure 6-68 Remove the rear cover and feed guide (simplex product) (1 of 6)

   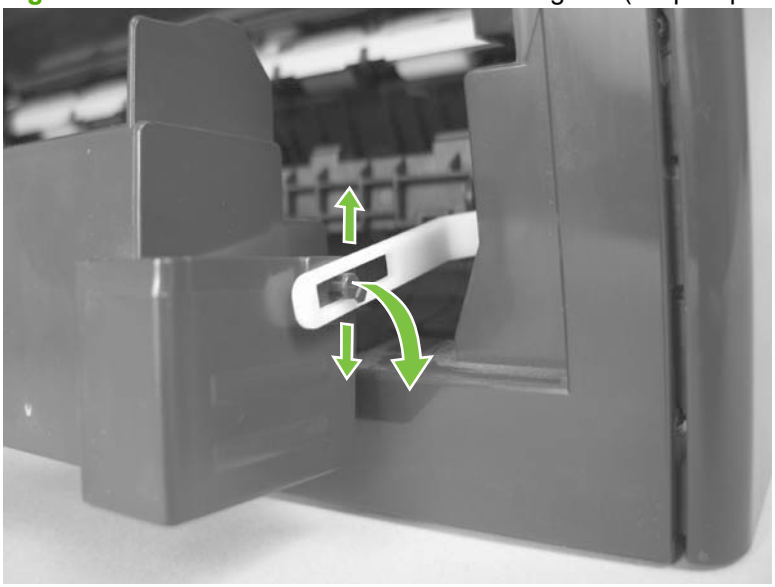

3. Remove three screws (callout 1).

   Figure 6-69 Remove the rear cover and feed guide (simplex product) (2 of 6)

   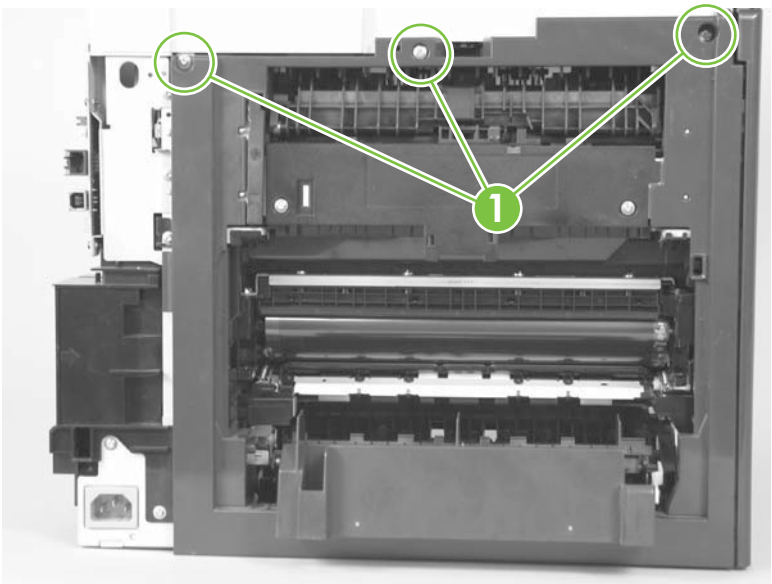

4. Release two tabs (callout 2).

Figure 6-70 Remove the rear cover and feed guide (simplex product) (3 of 6)

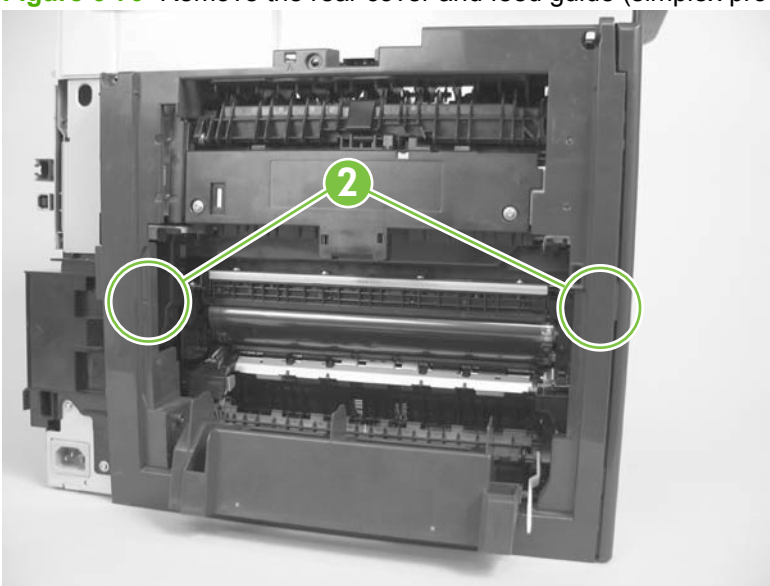

5. Carefully lift the cover up and then rotate it away from the product to remove it.

Figure 6-71 Remove the rear cover and feed guide (simplex product) (4 of 6)

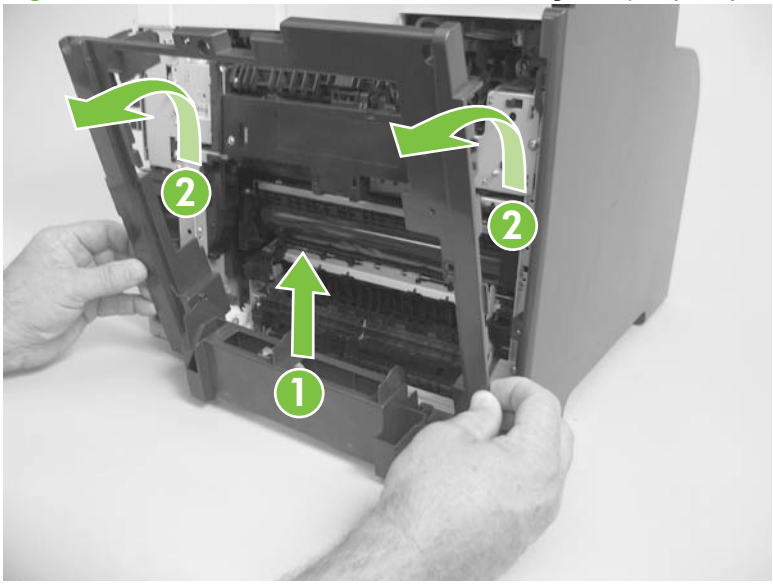

Reinstallation tip Make sure that the wire harnesses at the top of the chassis near the left-side cover are correctly retained so that they are not pinched when the rear cover is reinstalled.

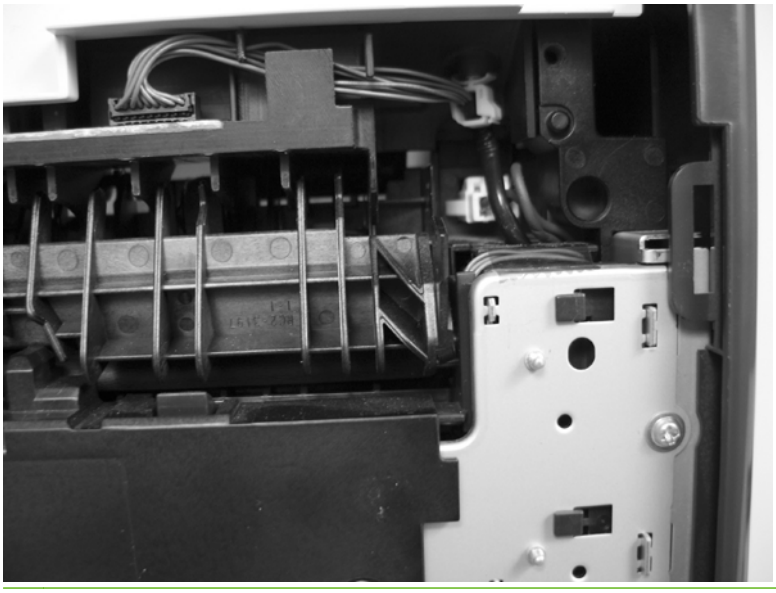

6. Carefully release a feed-guide hinge pin from the rear cover to release the feed guide.

Figure 6-72 Remove the rear cover and feed guide (simplex product) (5 of 6)

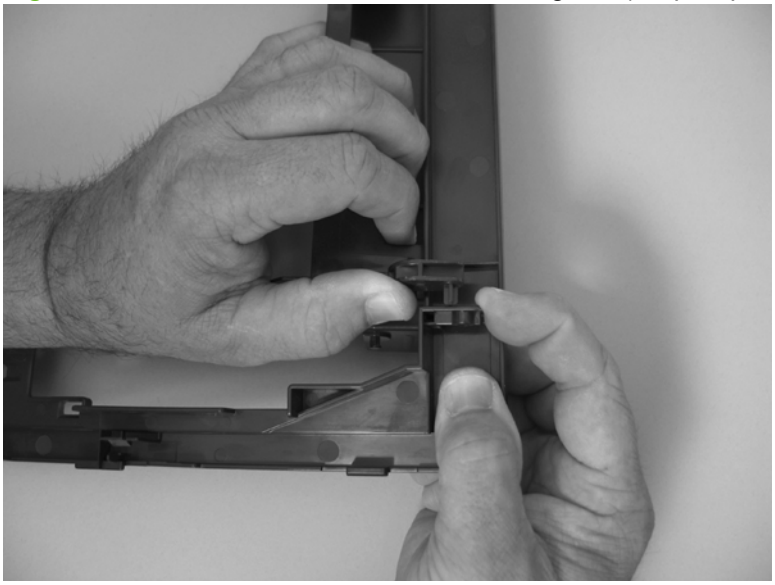

7. Remove the feed guide.

Figure 6-73 Remove the rear cover and feed guide (simplex product) (6 of 6)

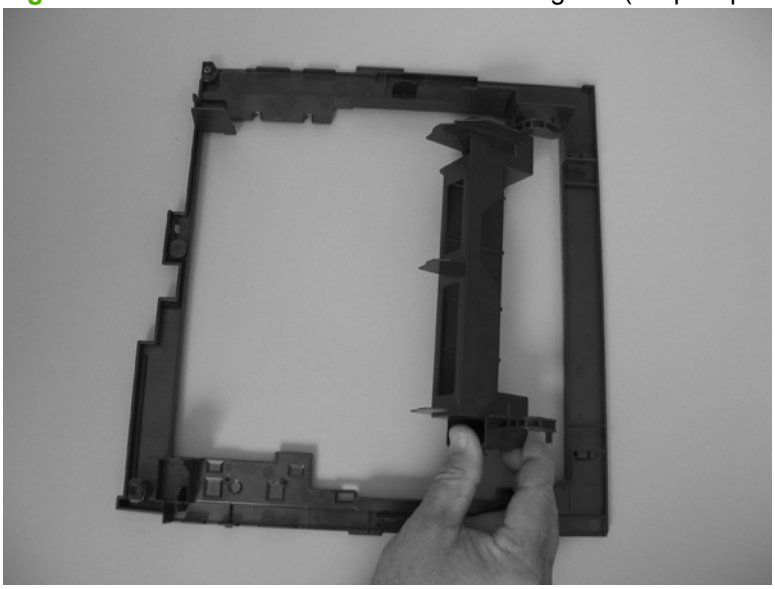

Rear-lower cover and rear-door links (duplex product)

1. Remove the following components:
   - Rear door. See Rear door (duplex product) on page 154.
   - Right cover. See Right cover on page 156.
   - Rear upper cover. See Rear-upper cover (duplex product) on page 165.
2. Use a pair of needle-nose pliers to release two tabs, and then remove the rear-door link cap. Repeat this step for the remaining rear-door link cap.

   Figure 6-74 Remove the rear- lower cover and rear-door links (duplex product) (1 of 6)

   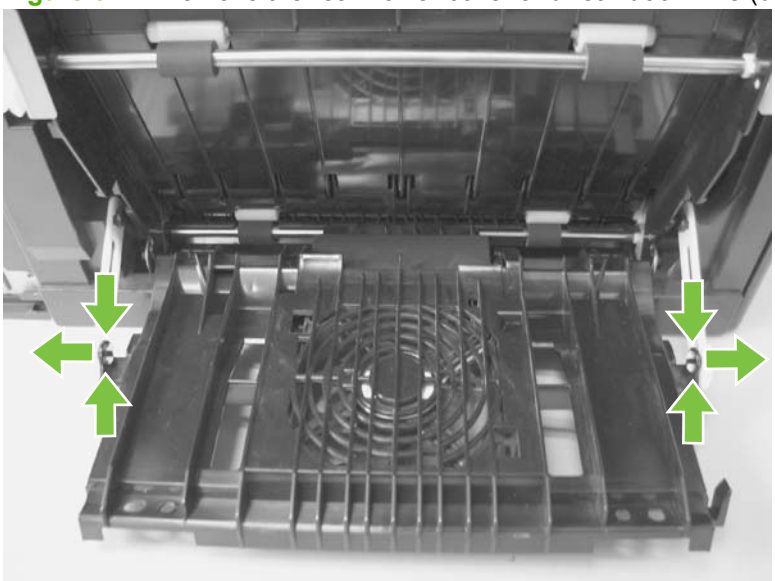

3. Open the duplex-feed assembly.
4. Release one tab (callout 1) and slightly separate the cover from the product.

   Figure 6-75 Remove the rear-lower cover and rear-door links (duplex product) (2 of 6)

   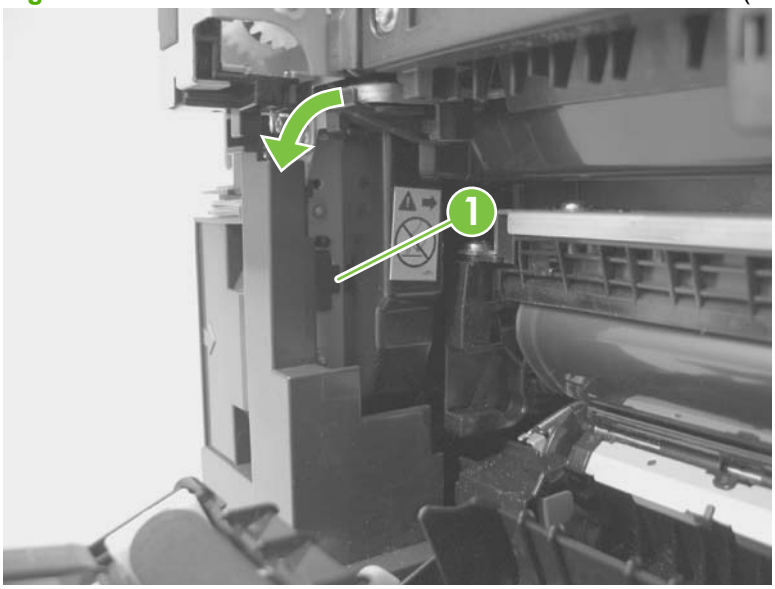

5. Release one tab (callout 2) and slightly separate the cover from the product.

Figure 6-76 Remove the rear-lower cover and rear-door links (duplex product) (3 of 6)

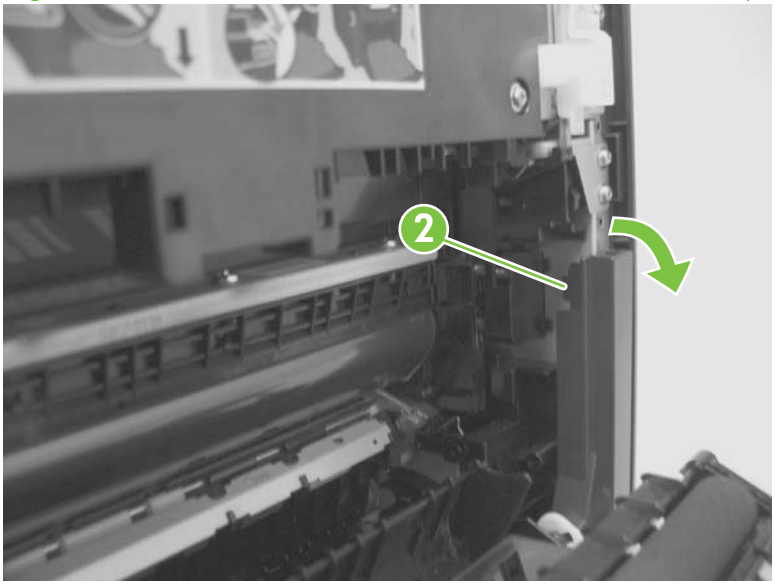

6. Close the duplex assembly, and then lift up on one side of the cover, and then the other side of the cover to release it.

Figure 6-77 Remove the rear-lower cover and link-guides (duplex product) (4 of 6)

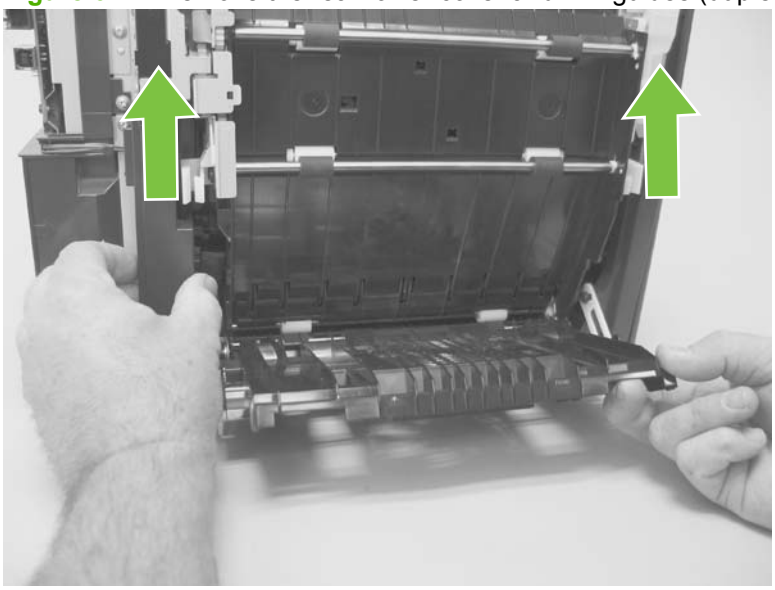

7. Slightly lift up the rear-door rib assembly, and then carefully slide the cover away from the product to remove it.

Figure 6-78 Remove the rear-lower cover and link-guides (duplex product) (5 of 6)

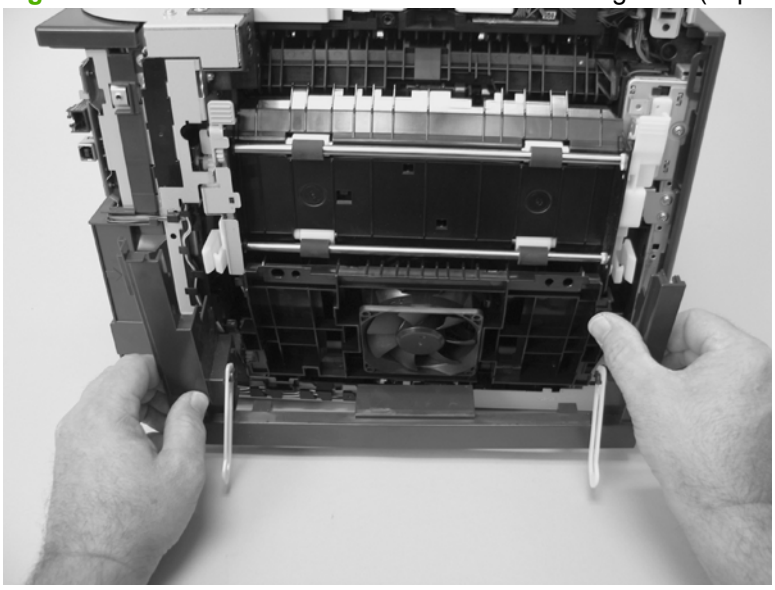

8. Rotate the rear-door link until the slot in the link aligns with the tap on the link-hinge pin, and then remove the rear-door link. Repeat this step for the remaining rear-door link.

NOTE: If you are installing a replacement rear-lower cover, remove the rear-door links from the discarded cover, and then install them on the replacement cover.

Figure 6-79 Remove the rear-lower cover and rear-door links (duplex product) (6 of 6)

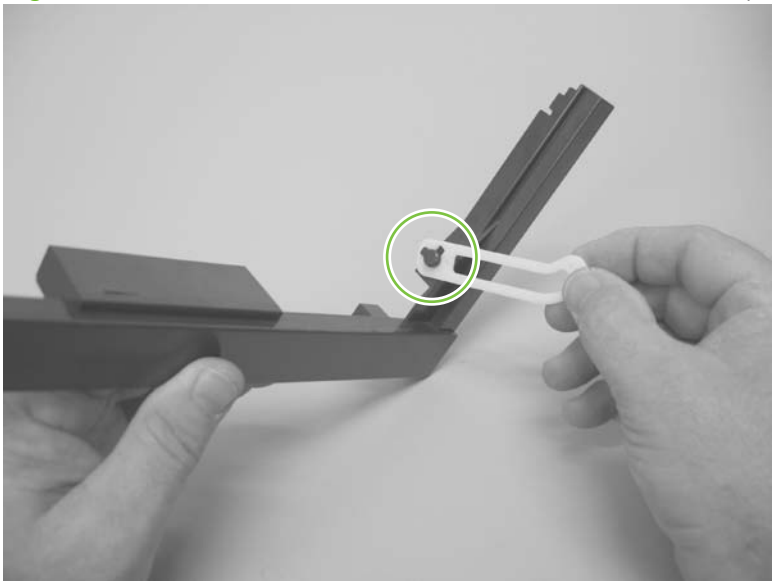

Rear-door rib assembly (duplex product)

NOTE: The duplex fan (FM2) is a component of the rear-door rib assembly.

1. Remove the following components:
   - Rear door. See Rear door (duplex product) on page 154.
   - Right cover. See Right cover on page 156.
   - Rear upper cover. See Rear-upper cover (duplex product) on page 165.
   - Rear-lower cover. See Rear-lower cover and rear-door links (duplex product) on page 170.
2. Disconnect one connector (callout 1).

TIP: The PCA can be dislodged when disconnecting the connector. To secure the PCA, carefully push it towards the inside of the product to clear the mounting tabs near the rib assembly (callout 2 shows the PCA correctly positioned under the tabs). Slide the PCA towards the rib assembly to position the edge of the PCA under the mounting tabs.

Figure 6-80 Remove the rear-door rib assembly (duplex product) (1 of 3)

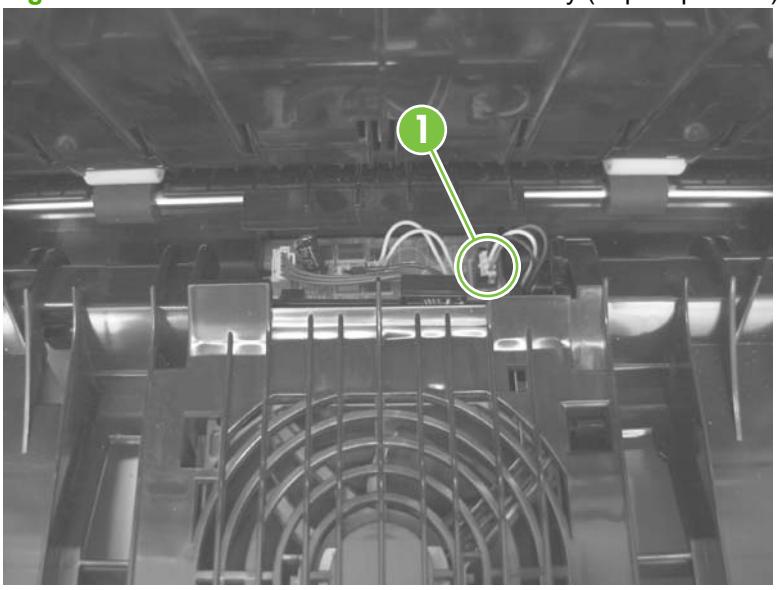

3. Slide the assembly toward the power cord side of the product to release the hinge pin.

Figure 6-81 Remove the rear-door rib assembly (duplex product) (2 of 3)

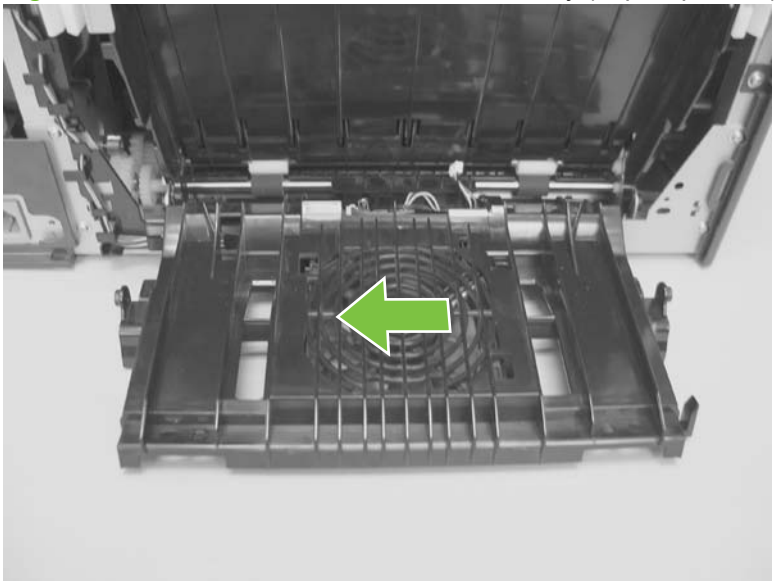

4. Remove the assembly.

Figure 6-82 Remove the rear-door rib assembly (duplex product) (3 of 3)

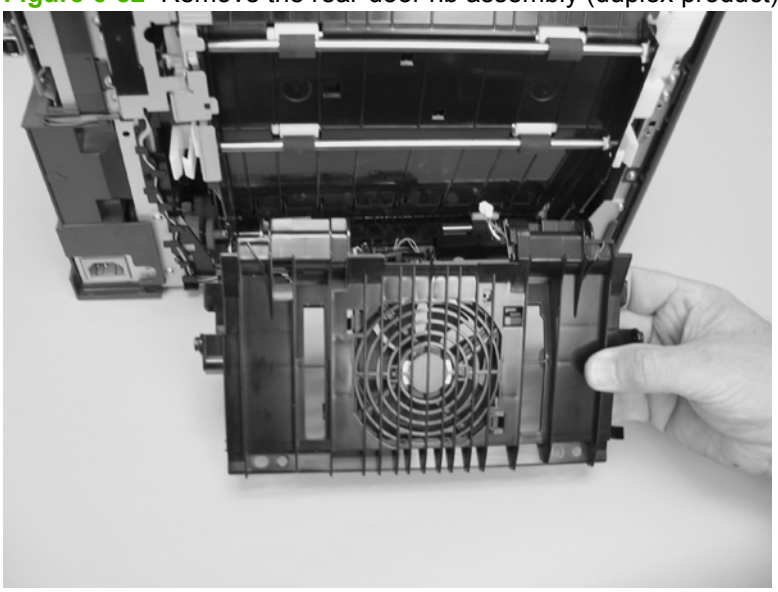

Fuser-motor assembly

1. Remove the following components:
   - Right cover. See Right cover on page 156.
   - Formatter. See Formatter PCA and fax PCA on page 158.
   - Simplex products
     - Rear door. See Rear door (simplex product) on page 152.
     - Rear cover (simplex products). See Rear cover and feed guide (simplex product) on page 166.
   - Duplex products
     - Rear-upper cover. See Rear-upper cover (duplex product) on page 165.
2. Remove four screws (callout 1).

Figure 6-83 Remove the fuser-motor assembly (1 of 10)

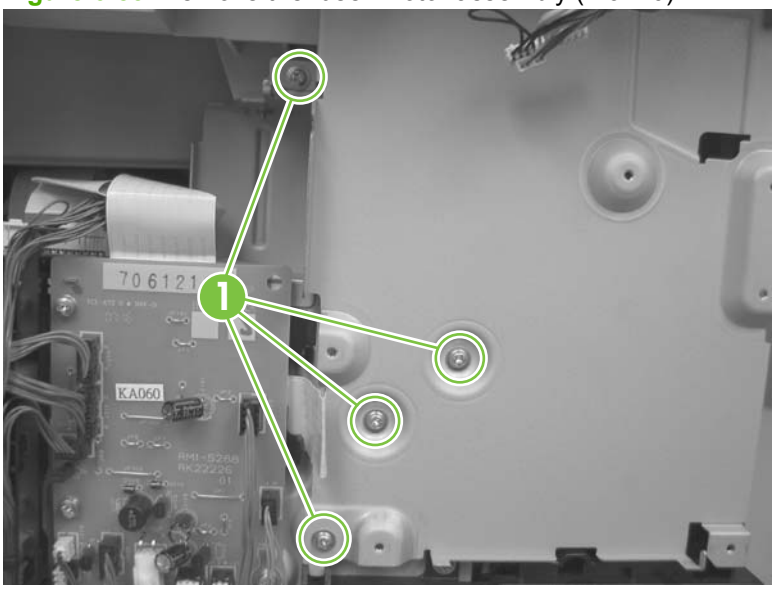

3. Remove three screws (callout 2) and the sheet-metal plate.

Figure 6-84 Remove the fuser-motor assembly (2 of 10)

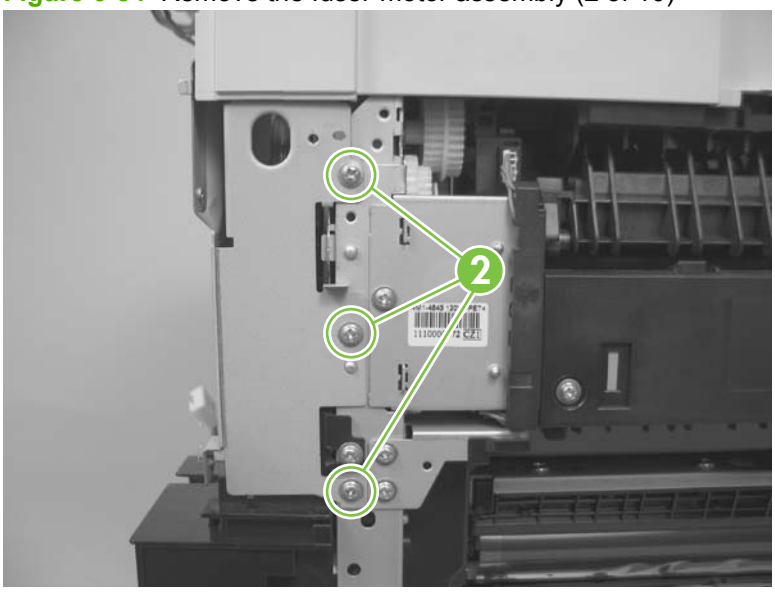

4. Disconnect one connector (callout 3), and then release the wire harnesses from the retainer (callout 4).

Figure 6-85 Remove the fuser-motor assembly (3 of 10)

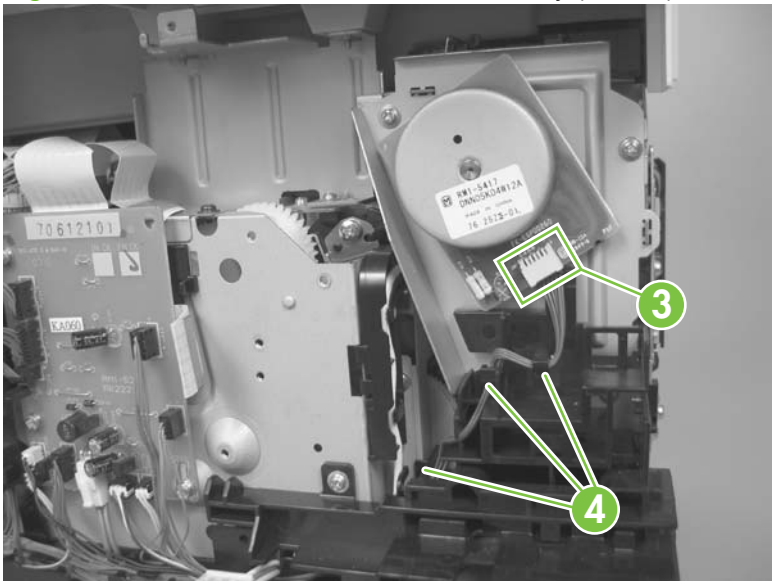

5. Remove three screws (callout 5) and remove the fan assembly.

NOTE: The fan assembly is still attached to the product. Move the fan assembly off to one side.

Figure 6-86 Remove the fuser-motor assembly (4 of 10)

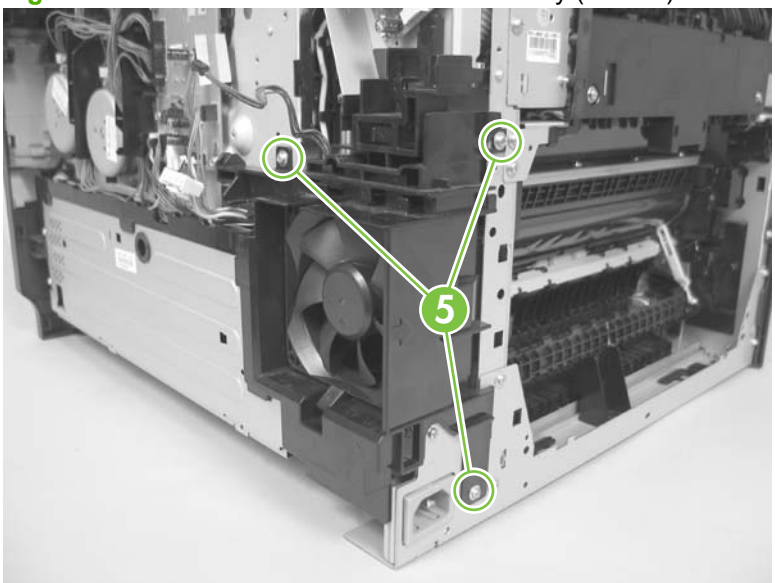

6. Release three tabs (callout 6), and then remove the retainer (callout 7).

Figure 6-87 Remove the fuser-motor assembly (5 of 10)

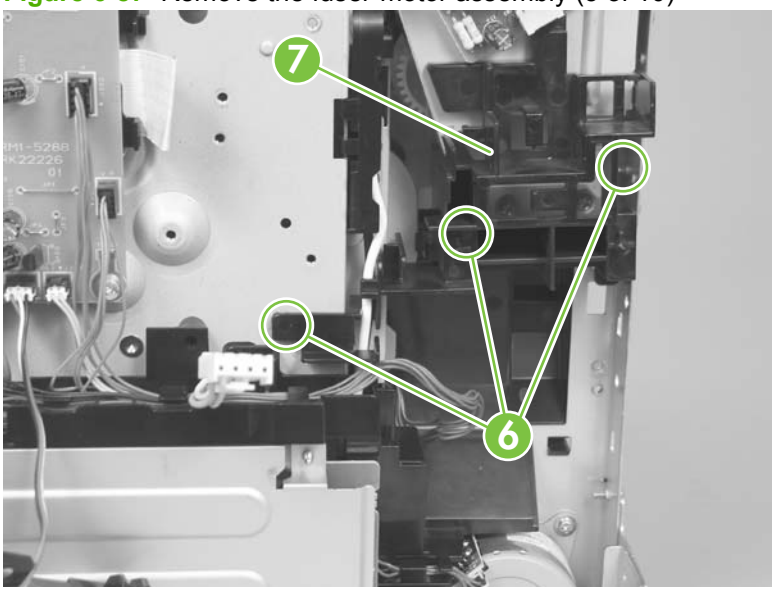

7. Disconnect two connectors (callout 8), and then release the wire harnesses from the retainer (callout 9).

Figure 6-88 Remove the fuser-motor assembly (6 of 10)

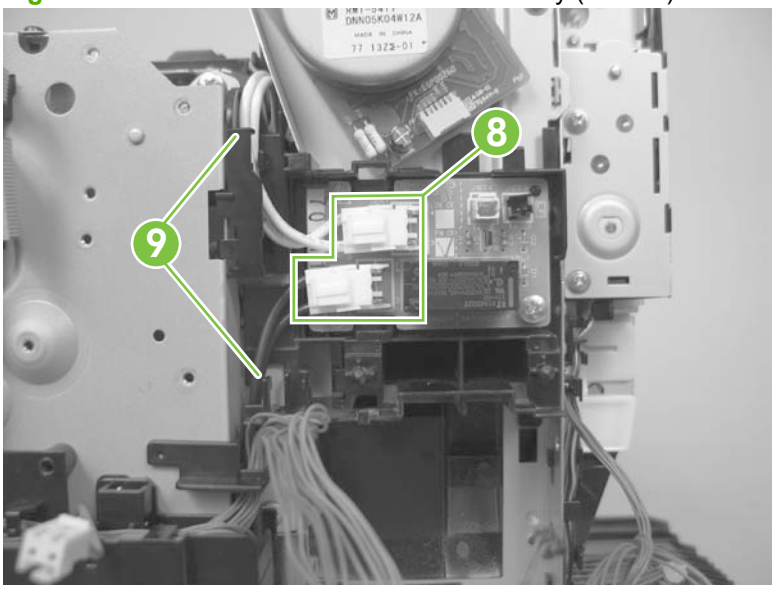

8. Release one tab (callout 10), and one pin (callout 11) to release the retainer and PCA assembly (callout 12).

Figure 6-89 Remove the fuser-motor assembly (7 of 10)

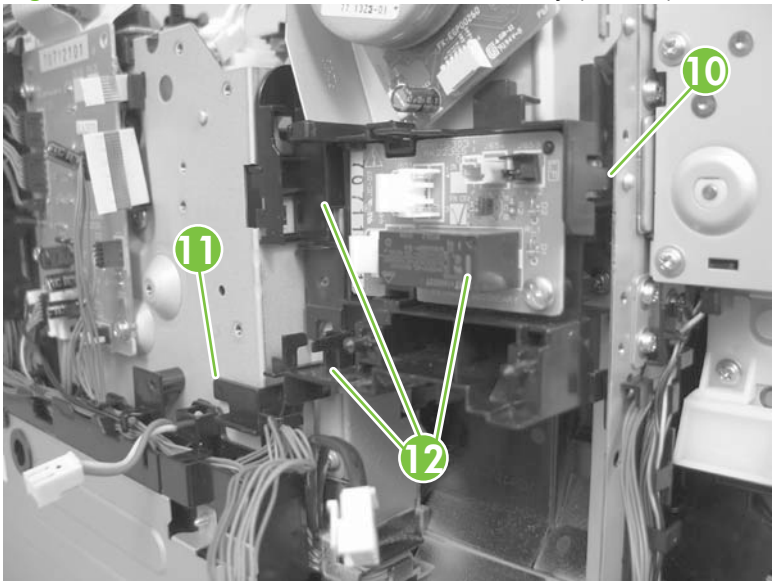

9. Remove the retainer and PCA assembly.

Figure 6-90 Remove the fuser-motor assembly (8 of 10)

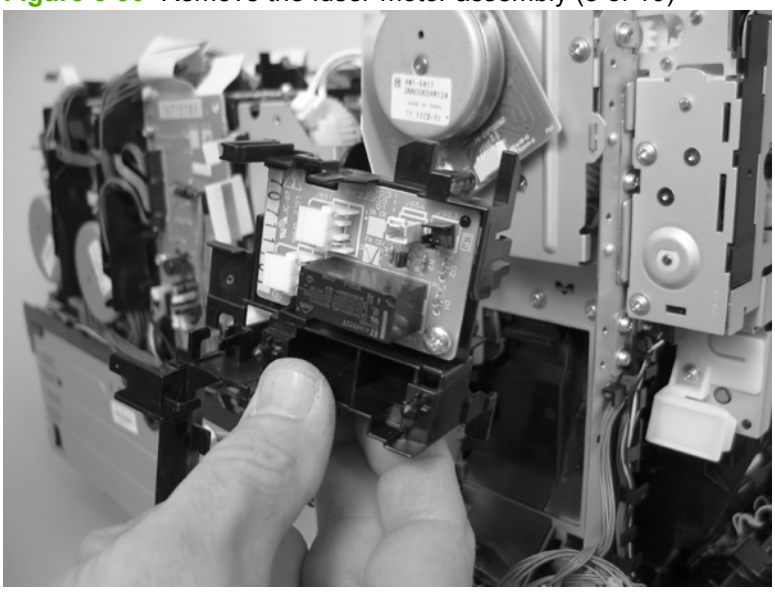

10. Before you proceed, take note that the spring and the gears behind the fuser-motor assembly are not captive.

△ **CAUTION:** Do not lose the spring or gears when you remove the fuser-motor assembly.

Figure 6-91 Remove the fuser-motor assembly (9 of 10)

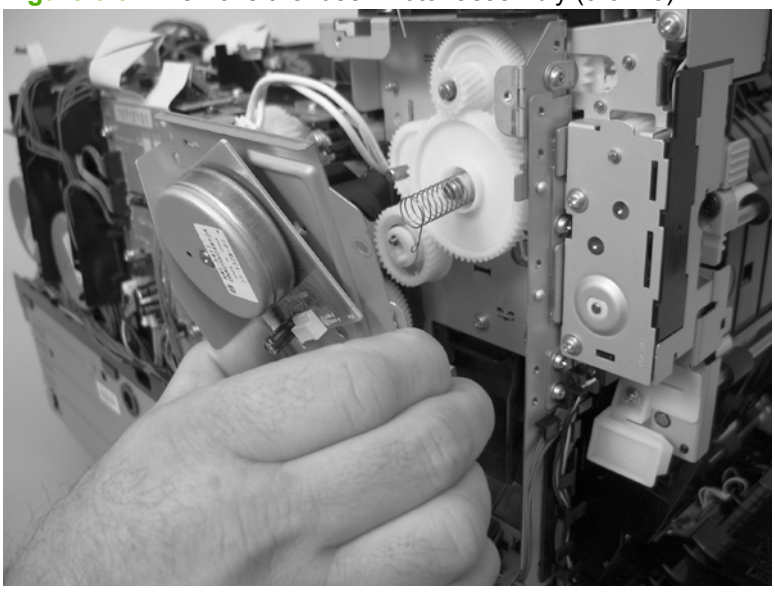

11. Remove three screws (callout 13), and then remove the fuser-motor assembly.

Figure 6-92 Remove the fuser-motor assembly (10 of 10)

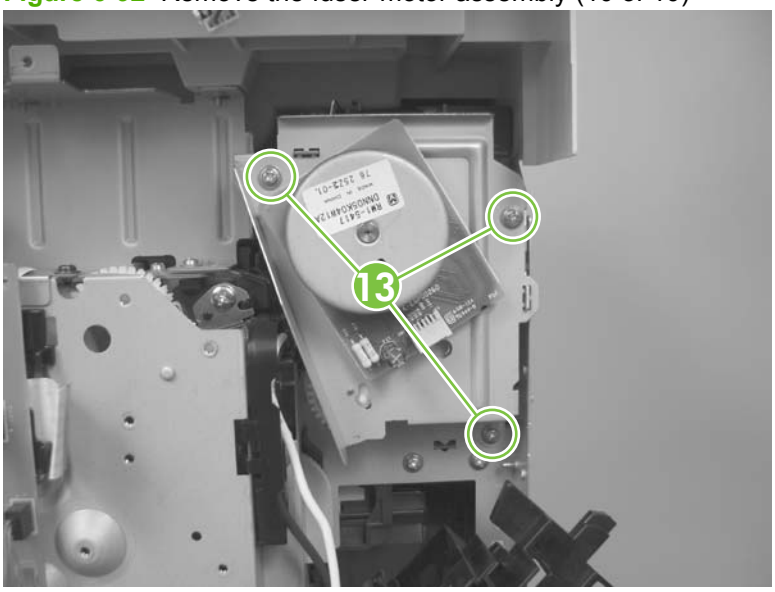

Reinstall the fuser-motor assembly

Make sure that the fuser-motor assembly spring (callout 1) and gear pin (callout 2) are correctly positioned in the hole and slot provided in the assembly mounting bracket. The assembly mounting bracket will fit flat against the product chassis when the fuser-motor assembly is correctly installed.

Figure 6-93 Reinstall the fuser-motor assembly

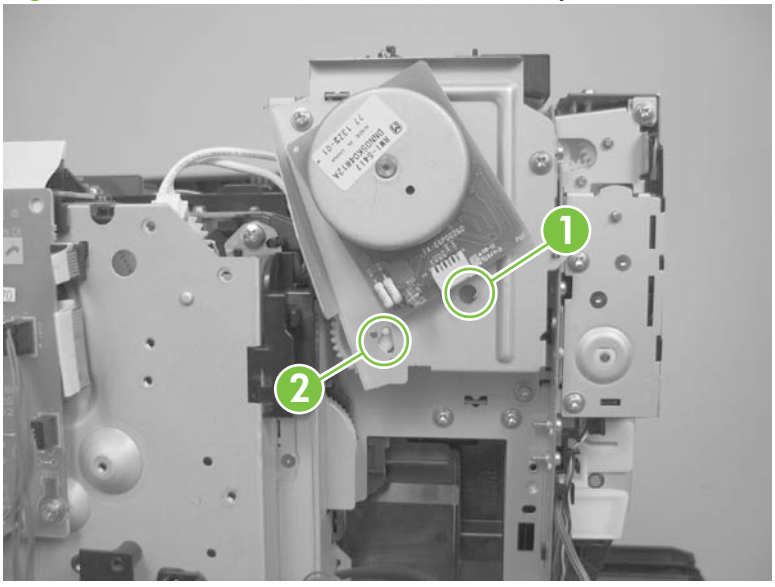

Upper-cover assembly

1. Remove the following components:
   - Right cover. See Right cover on page 156.
   - Scanner assembly. See Scanner assembly on page 163.
   - Right-front cover and power button. See Right-front cover and power button on page 197.
   - Simplex products
     - Rear door. See Rear door (simplex product) on page 152.
     - Rear cover. See Rear cover and feed guide (simplex product) on page 166.
   - Duplex products
     - Rear upper cover. See Rear-upper cover (duplex product) on page 165.
2. Remove four screws (callout 1).

Figure 6-94 Remove the upper-cover assembly (1 of 3)

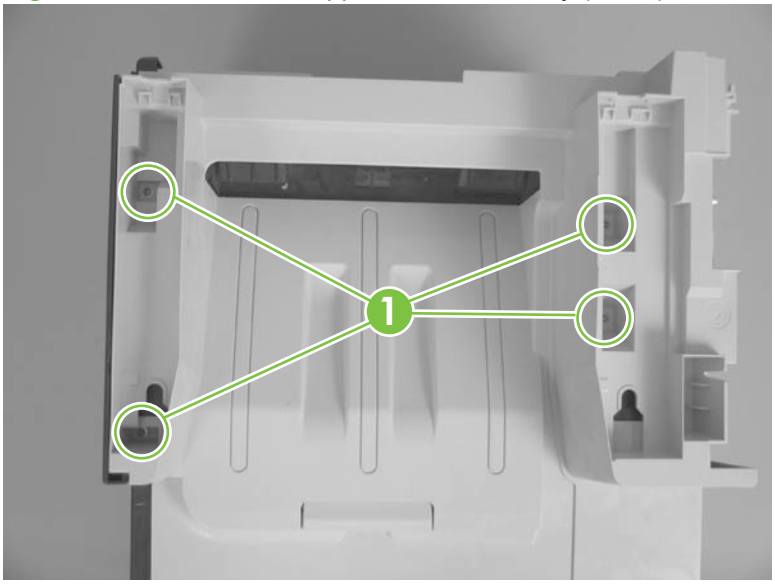

3. Slightly raise the back of the cover up and off of the product.

Figure 6-95 Remove the upper-cover assembly (2 of 3)

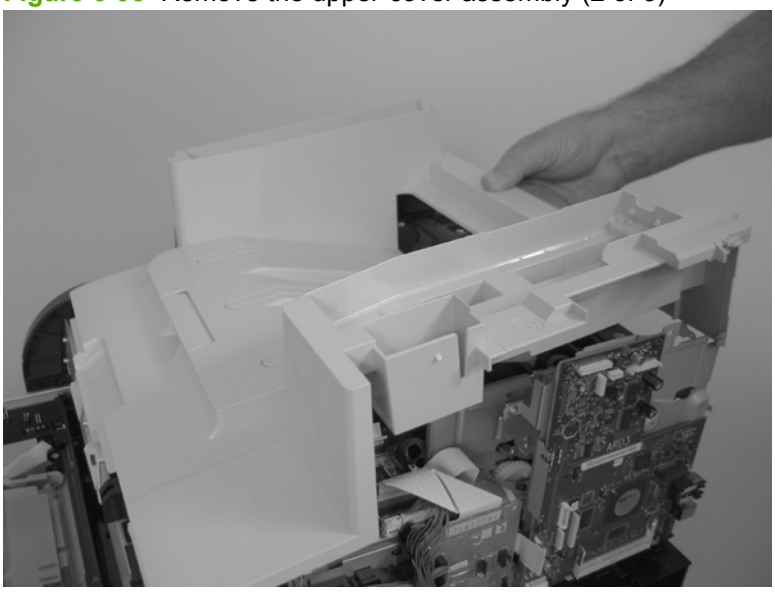

4. Slide the cover toward the back of the product to remove it.

Figure 6-96 Remove the upper-cover assembly (3 of 3)

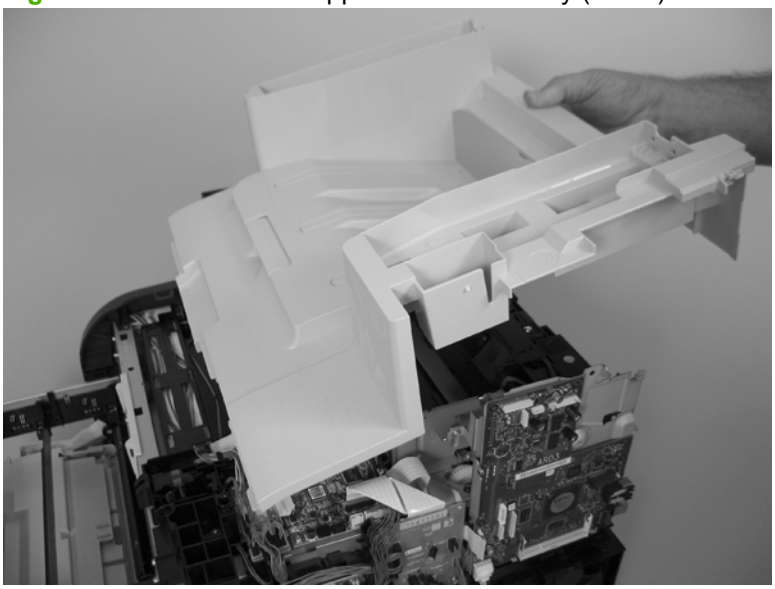

Reinstall the upper-cover assembly

1. Position the upper-cover so that the front-left corner of the upper cover engages the left-side cover (callout 1).

   Figure 6-97 Reinstall the upper-cover assembly (1 of 3)

   

2. Slightly push the cover toward the front of the product to engage the front-locking tabs (callout 2) with the holes in the chassis.

   NOTE: Make sure that the right-front edge of the upper cover (where the product right-front cover will be installed) is correctly positioned on the chassis.

   Figure 6-98 Reinstall the upper-cover assembly (2 of 3)

   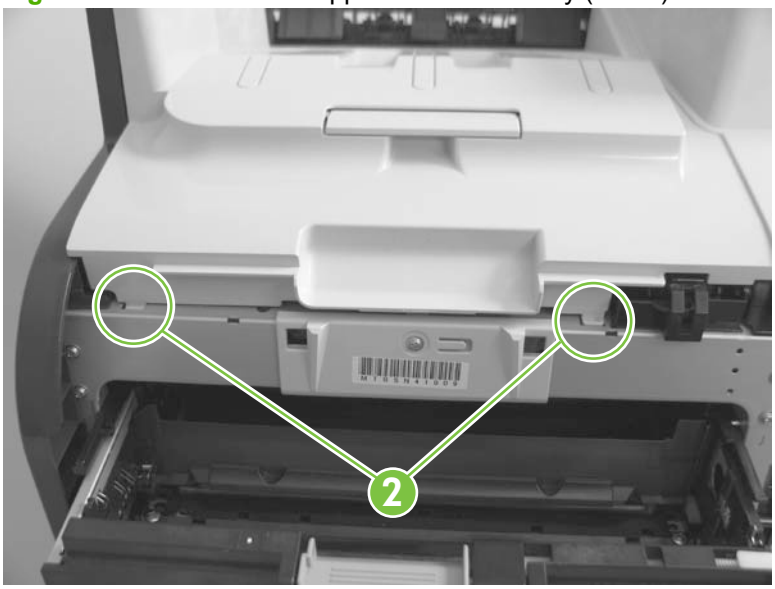

3. Carefully pry the right-rear corner of the upper cover away from the product until the cover fits over the chassis.

   Lower the cover onto the product.

   Figure 6-99 Reinstall the upper-cover assembly (3 of 3)

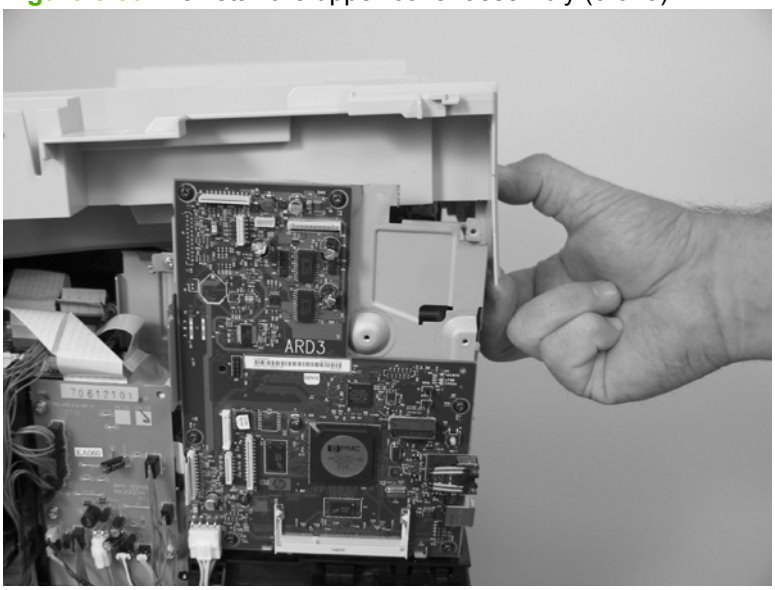

Left cover

1. Remove the following components:
   - Right cover. See Right cover on page 156.
   - Scanner assembly. See Scanner assembly on page 163.
   - Simplex products
     - Rear door. See Rear door (simplex product) on page 152.
     - Rear cover. See Rear cover and feed guide (simplex product) on page 166.
   - Duplex products
     - Rear-lower cover. See Rear-upper cover (duplex product) on page 165.
   - Upper-cover assembly. See Upper-cover assembly on page 181.
2. Remove one screw (callout 1).

Figure 6-100 Remove the left cover (1 of 4)

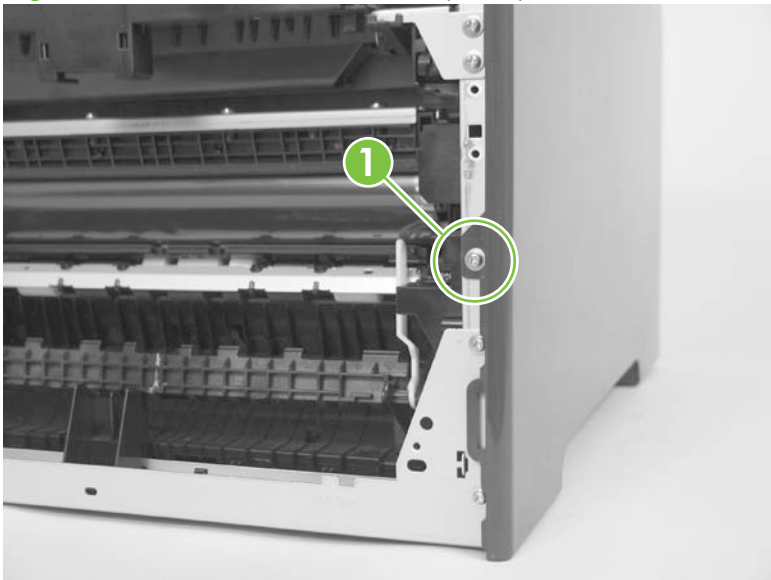

3. Remove one screw (callout 2).

Figure 6-101 Remove the left cover (2 of 4)

4. Slightly lift up on the cover, and then rotate the top of the cover away from the product.

Figure 6-102 Remove the left cover (3 of 4)

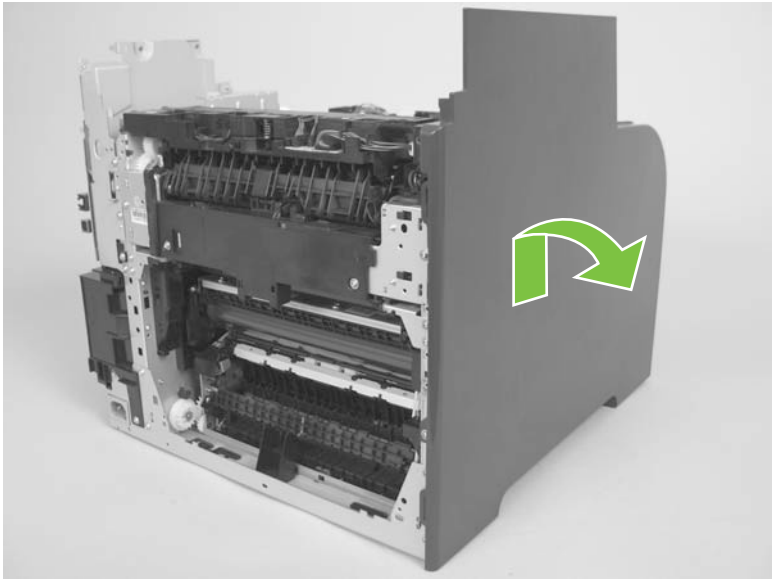

5. Remove the cover.

Figure 6-103 Remove the left cover (4 of 4)

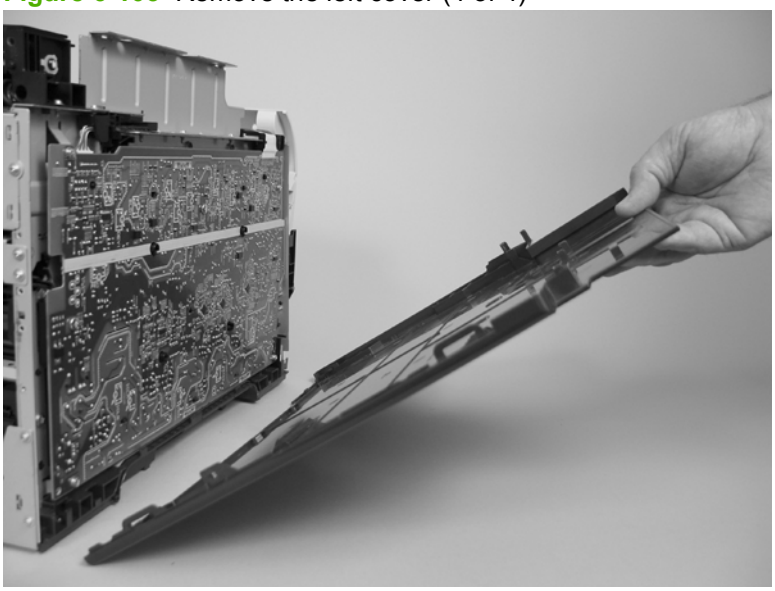

Reinstall the left cover

1. When you reinstall the left cover, make sure that the slot in the cover (callout 1) aligns with the tab (callout 2) on the product.

Figure 6-104 Reinstall the left cover (1 of 2)

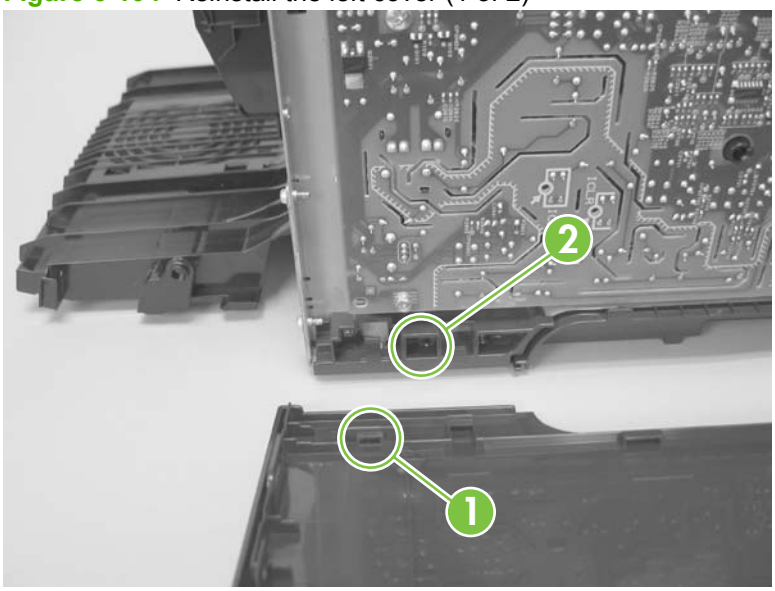

2. When you reinstall the left cover, make sure that the pin on the cover (callout 3) aligns with the slot (callout 4) in the product.

Figure 6-105 Reinstall the left cover (2 of 2)

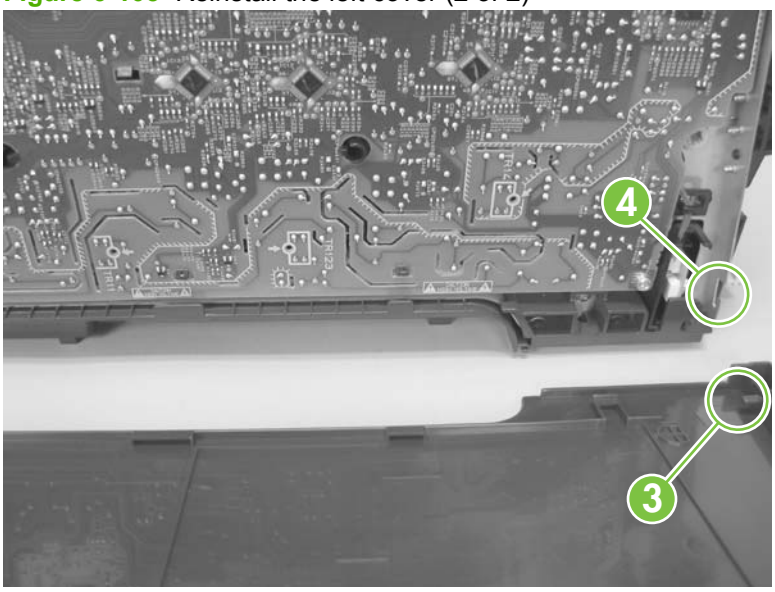

High-voltage power-supply PCA

1. Remove the following components:
   - Right cover. See Right cover on page 156.
   - Scanner assembly. See Scanner assembly on page 163.
   - Simplex products
     - Rear door. See Rear door (simplex product) on page 152.
     - Rear cover. See Rear cover and feed guide (simplex product) on page 166.
   - Duplex products
     - Rear-lower cover. See Rear-upper cover (duplex product) on page 165.
   - Upper-cover assembly. See Upper-cover assembly on page 181.
   - Left cover. See Left cover on page 185.
2. Remove two screws (callout 1), and then remove the sheet-metal plate (callout 2).

Figure 6-106 Remove the high-voltage power-supply PCA (1 of 5)

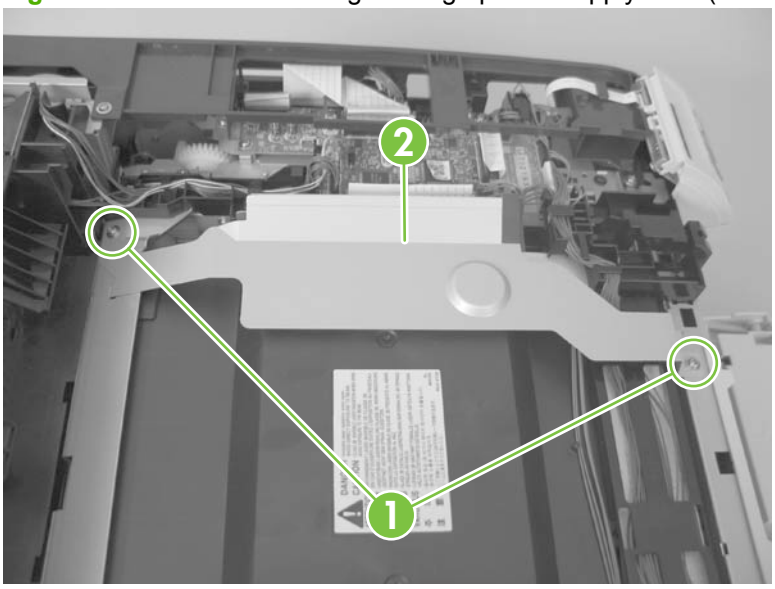

3. Release six tabs (callout 3), and then remove the black-plastic cover.

Figure 6-107 Remove the high-voltage power-supply PCA (2 of 5)

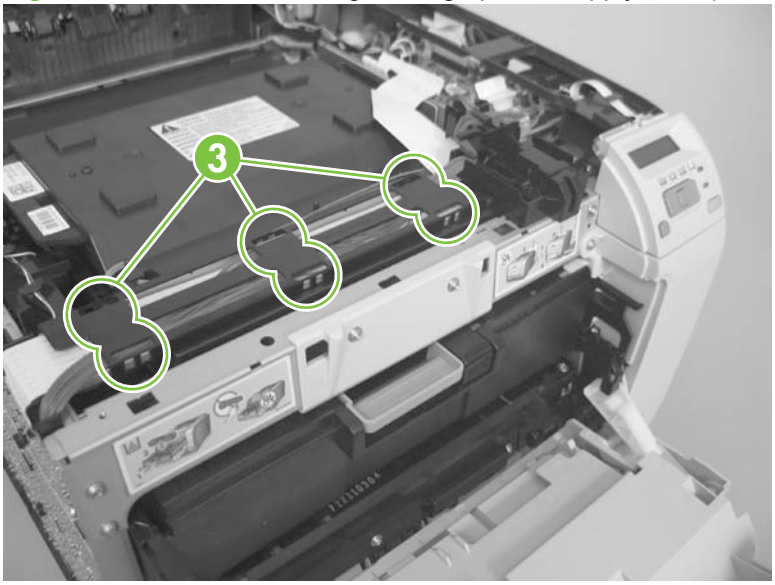

4. Disconnect one FFC (callout 4) on the DC controller.

Figure 6-108 Remove the high-voltage power-supply PCA (3 of 5)

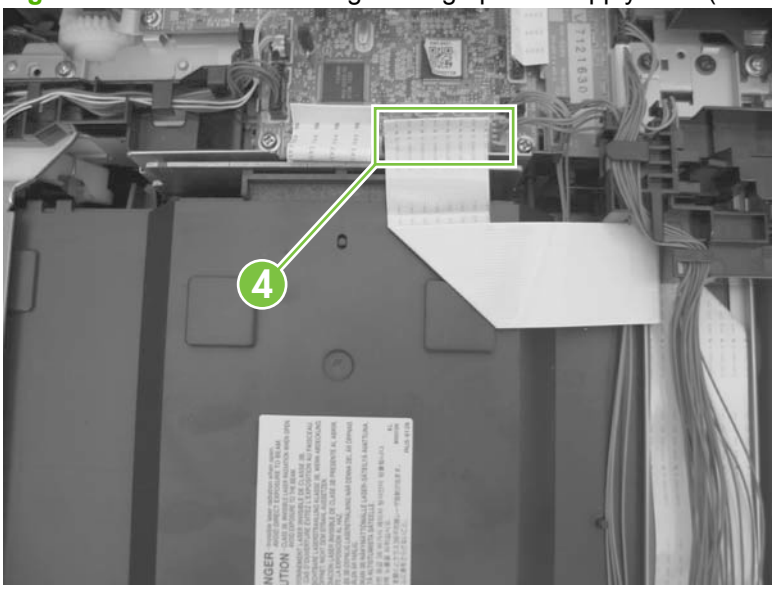

5. Disconnect one connector (callout 5), and then remove six screws (callout 6).

Figure 6-109 Remove the high-voltage power-supply PCA (4 of 5)

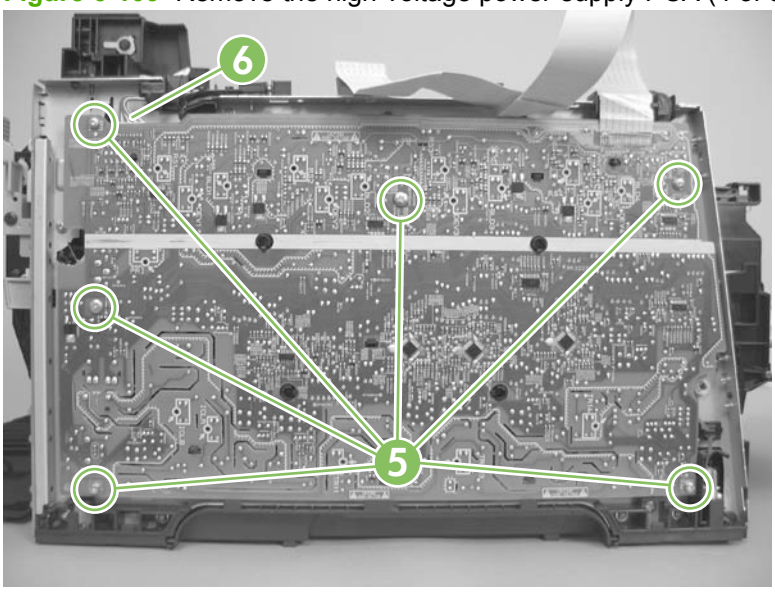

6. Release ten tabs (callout 7), and then remove the high-voltage power-supply PCA.

Figure 6-110 Remove the high-voltage power-supply PCA (5 of 5)

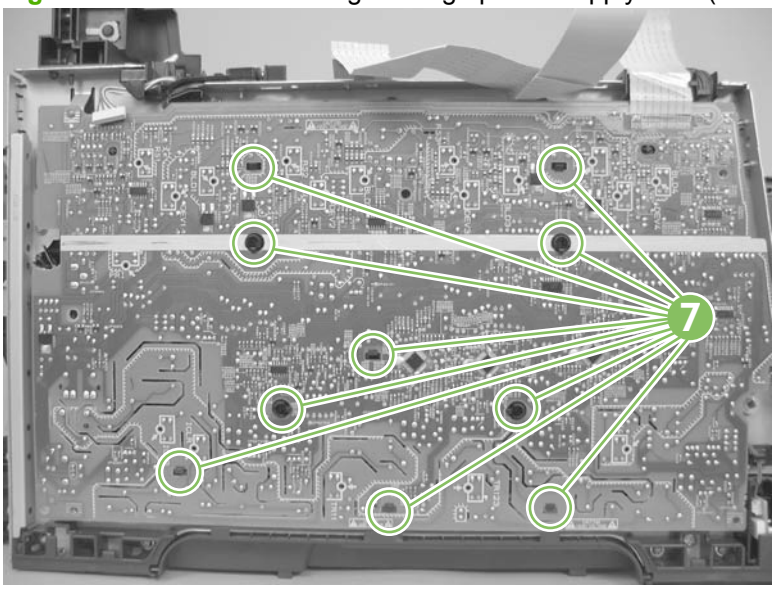

Color-misregistration sensor assembly

1. Remove the following components:
   - Right cover. See Right cover on page 156.
   - Scanner assembly. See Scanner assembly on page 163.
   - Simplex products
     - Rear door. See Rear door (simplex product) on page 152.
     - Rear cover. See Rear cover and feed guide (simplex product) on page 166.
   - Duplex products
     - Rear-lower cover. See Rear-upper cover (duplex product) on page 165.
   - Upper-cover assembly. See Upper-cover assembly on page 181.
   - Left cover. See Left cover on page 185.
   - High-voltage power-supply PCA. See High-voltage power-supply PCA on page 189.
2. Disconnect one connector (callout 1), and then release the wire harness from the guide (callout 2).

Figure 6-111 Remove the color-misregistration sensor assembly PCA (1 of 5)

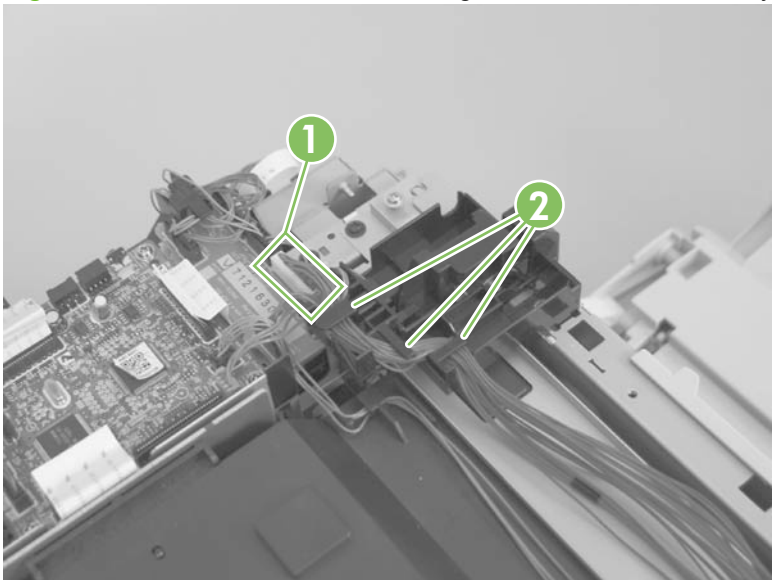

3. Release the wire harness from the guide (callout 3).

NOTE: When you remove the sensor assembly later in this procedure, pass the connector and wire harness through the hole in the chassis (callout 4).

Figure 6-112 Remove the color-misregistration sensor assembly PCA (2 of 5)

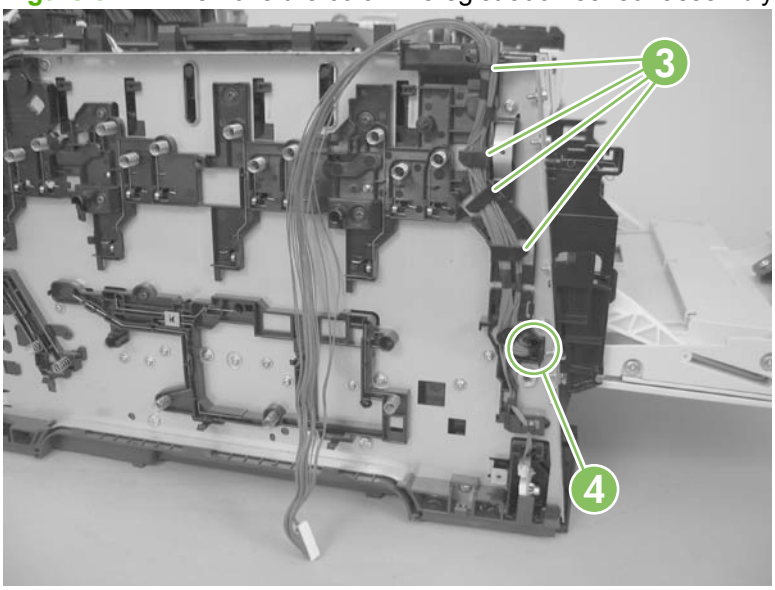

4. Remove two screws (callout 5).

Figure 6-113 Remove the color-misregistration sensor assembly PCA (3 of 5)

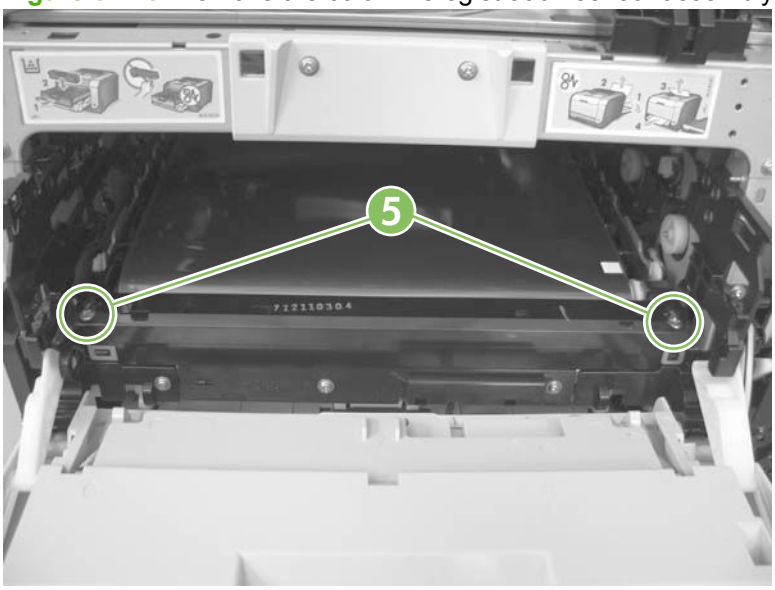

5. Carefully separate the sensor assembly (callout 6) from the product and pass the wire harness through the hole in the chassis.

NOTE: See Figure 6-112 Remove the color-misregistration sensor assembly PCA (2 of 5) on page 193.

Figure 6-114 Remove the color-misregistration sensor assembly PCA (4 of 5)

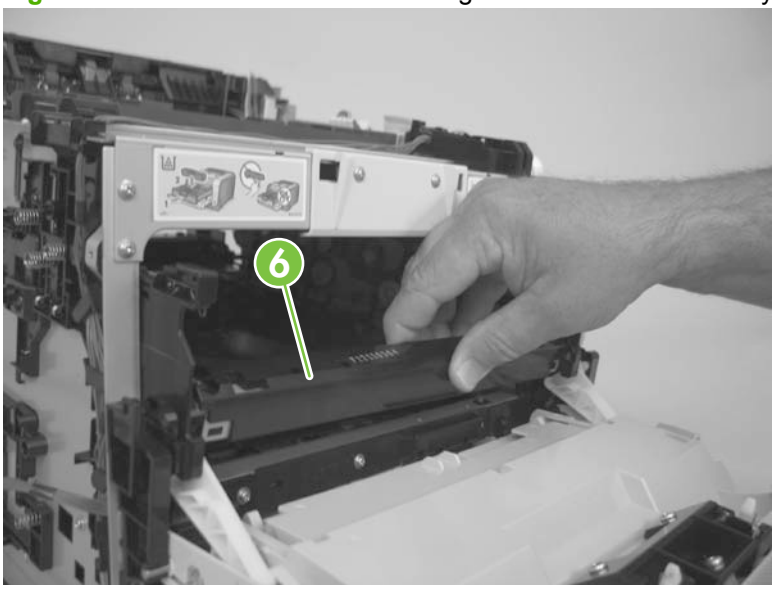

6. Remove the sensor assembly from the product.

Figure 6-115 Remove the color-misregistration sensor assembly PCA (5 of 5)

Reinstall the color-misregistration sensor assembly

TIP: You might have to attempt this reinstall procedure several times before you successfully pass the connector through the hole in the chassis.

1. Push the sensor assembly wire-harness connector into the hole in the chassis from the ITB side of the product.

   Figure 6-116 Reinstall the color-misregistration sensor assembly PCA (1 of 2)

   

2. Use a small flat blade screwdriver to guide the connector through the hole.

   Figure 6-117 Reinstall the color-misregistration sensor assembly PCA (2 of 2)

   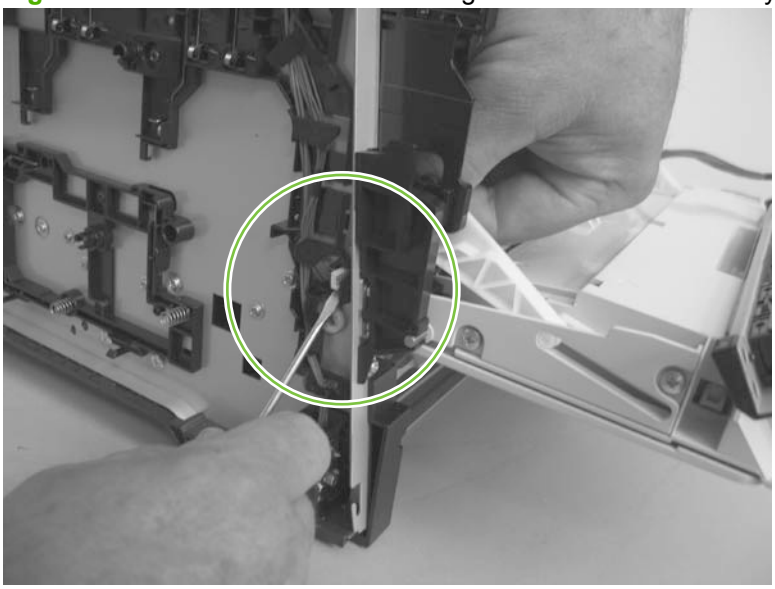

Fan (FM1)

△ **CAUTION:** When the fan is reinstalled, it must pull air into the product. The air-flow indicator arrow embossed on the fan chassis point into the fan duct when the fan is correctly installed.

1. Remove the right cover. See Right cover on page 156.
2. Disconnect one connector (callout 1; J206)

Figure 6-118 Remove the fan (FM1) (1 of 2)

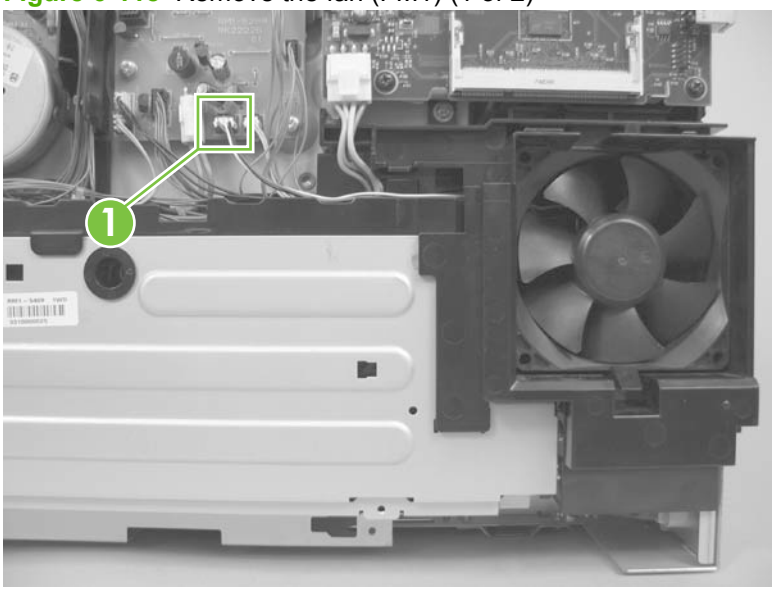

3. Release three tabs (callout 2), and then remove the fan.

NOTE: As the fan is removed, you must feed the wire harness through an opening behind the fan duct.

TIP: Use a small flat blade screwdriver to release the upper to tabs on the fan duct a second time when the fan is about half way out of the duct.

Figure 6-119 Remove the fan (FM1) (2 of 2)

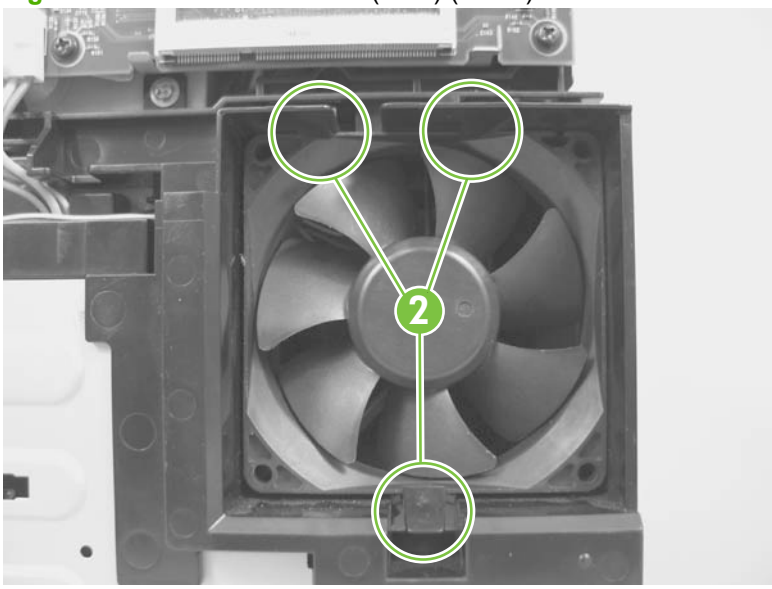

Right-front cover and power button

1. Remove the right cover. See Right cover on page 156.
2. Open the front door and remove two screws (callout 1).

Figure 6-120 Remove the right-front cover and power button (1 of 5)

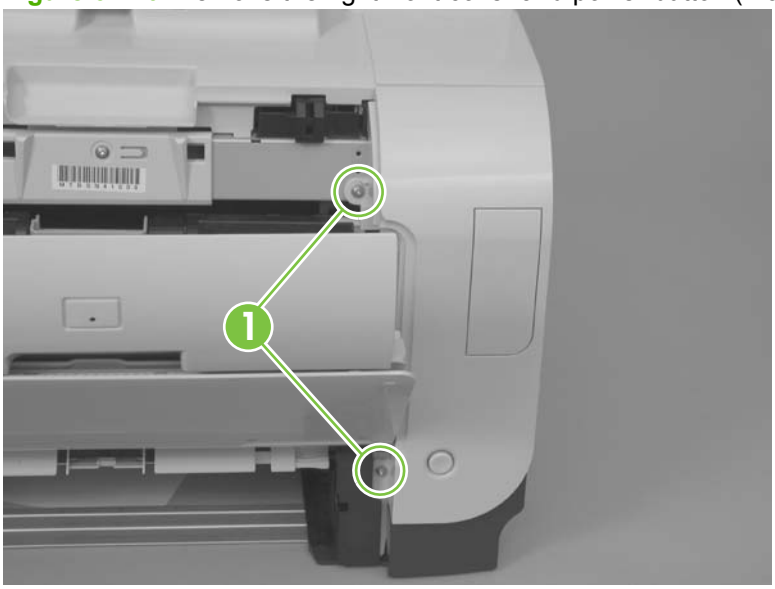

3. Remove one screw (callout 2).

Figure 6-121 Remove the right-front cover and power button (2 of 5)

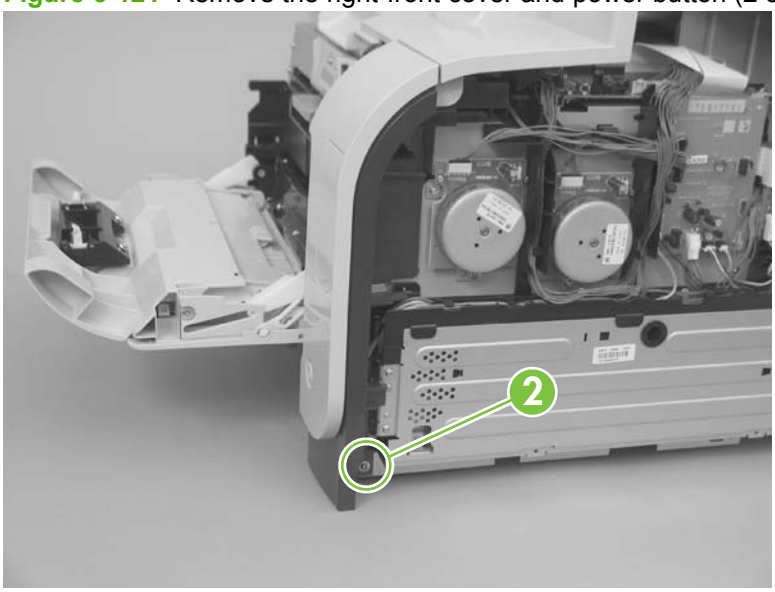

4. Slide the cover slightly toward the right side of the product to release it.

NOTE: **For fax/memory-card models only**: When the sliding the cover, do not damage the FFC guide (callout 3).

Figure 6-122 Remove the right-front cover and power button (3 of 5)

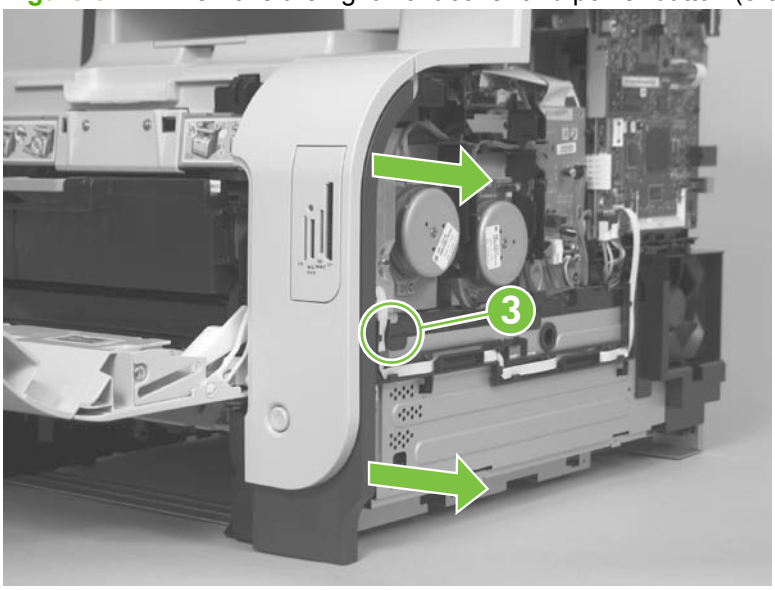

5. Remove the cover.

NOTE: **For all models**: If you are replacing the right-front cover, proceed to the following step and remove the power button. Install the power button on the replacement cover.

For base models only: If you are replacing the right-front cover remove the blanking cover and install it on the replacement cover.

For fax/memory-card models only: If you are replacing the right-front cover remove the memory-card cover and PCA, and then install them on the replacement cover. See Memory-card cover and PCA (fax/memory-card models) on page 200.

Figure 6-123 Remove the right-front cover and power button (4 of 5)

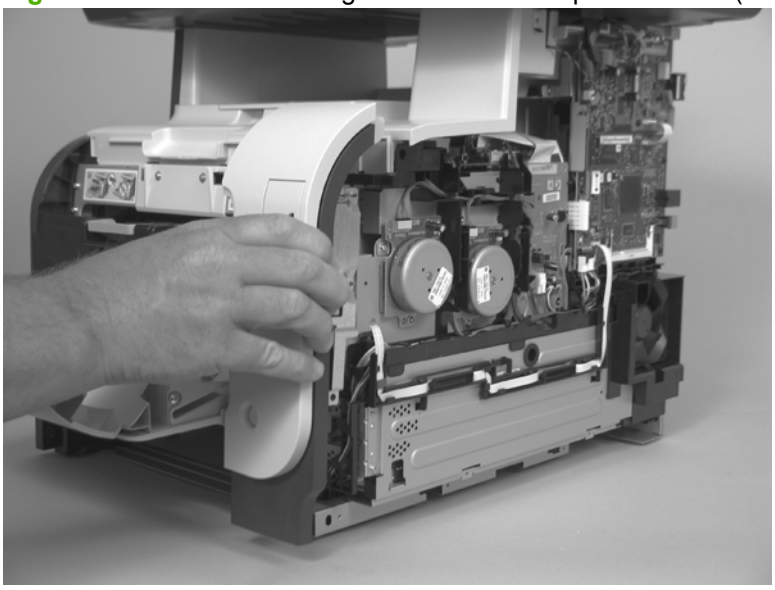

6. Release two tabs (callout 4), and then remove the power button.

Figure 6-124 Remove the right-front cover and power button (5 of 5)

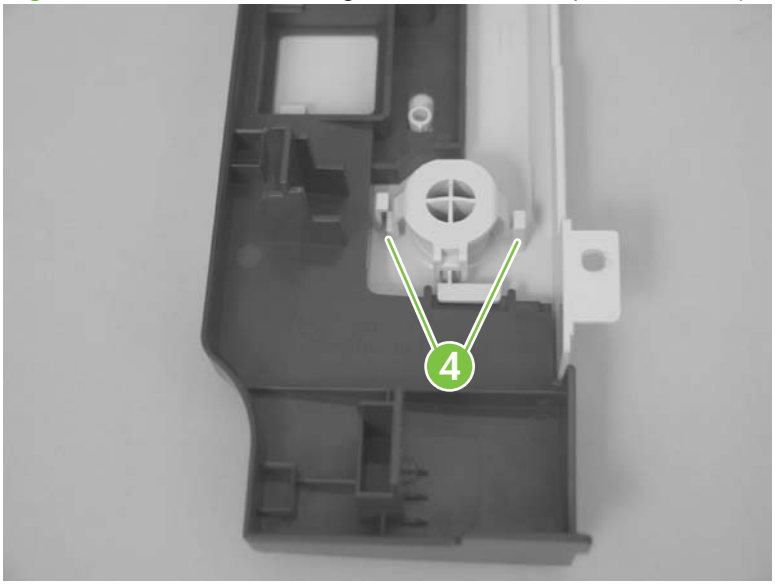

Memory-card cover and PCA (fax/memory-card models)

1. Remove the right cover. See Right cover on page 156.
2. Disconnect one FFC (callout 1) and remove two screws (callout 2).

Figure 6-125 Remove the memory-card cover and PCA (1 of 7)

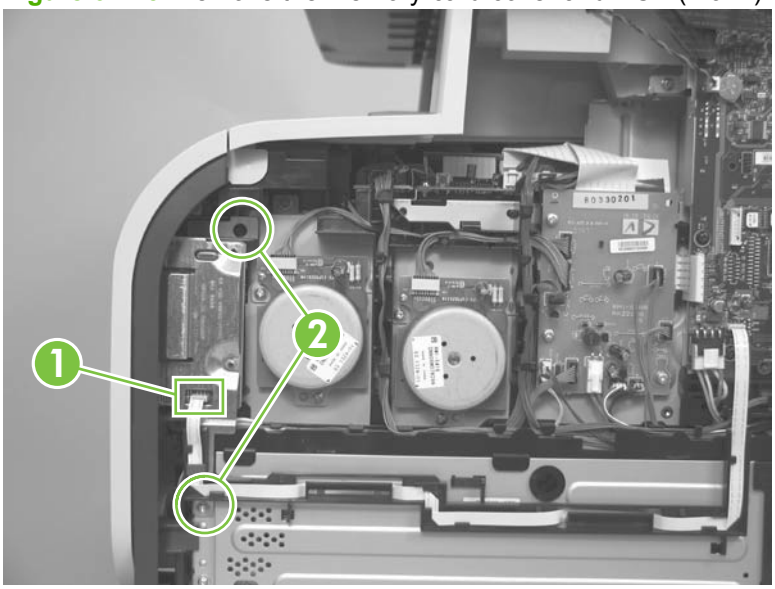

3. Open the front door and remove two screws (callout 3).

Figure 6-126 Remove the memory-card cover and PCA (2 of 7)

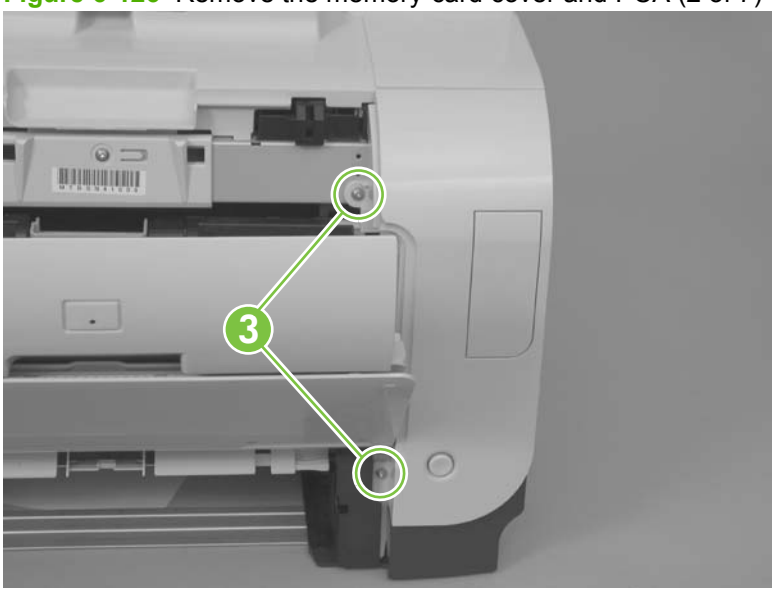

4. Remove one screw (callout 4).

Figure 6-127 Remove the memory-card cover and PCA (3 of 7)

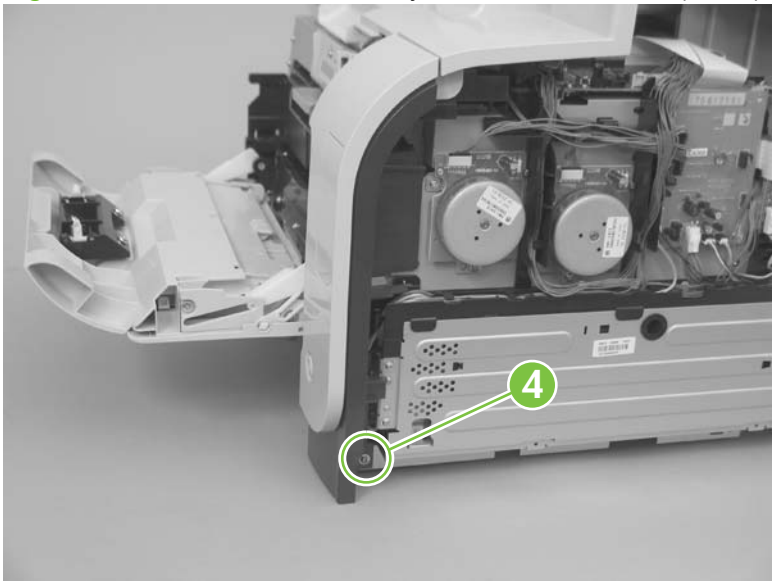

5. Slide the cover slightly toward the right side of the product to release it, and then remove the cover.

NOTE: When the sliding the cover, do not damage the FFC guide (callout 5).

Figure 6-128 Remove the memory-card cover and PCA (4 of 7)

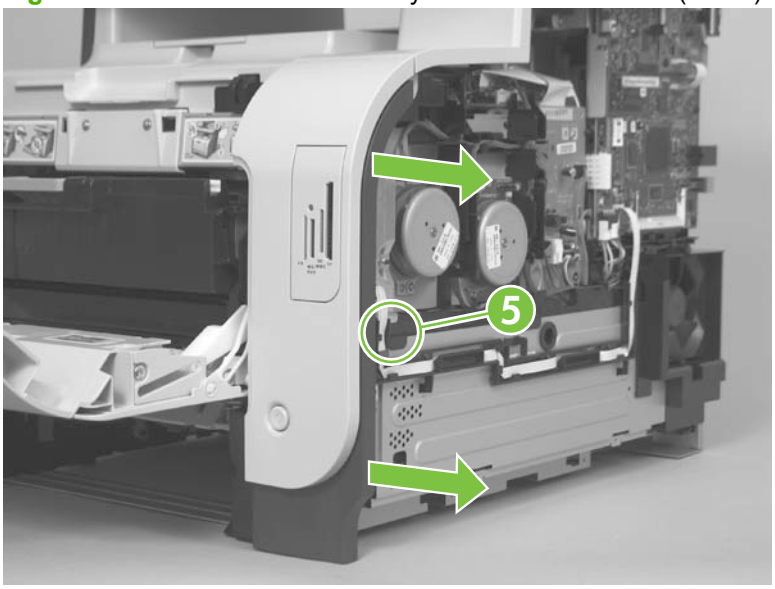

6. Release two tabs (callout 6).

Figure 6-129 Remove the memory-card cover and PCA (5 of 7)

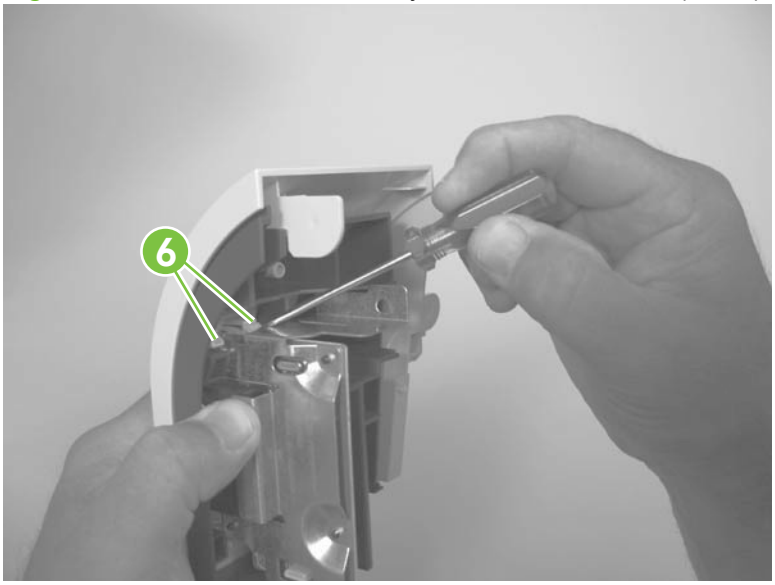

7. Support the memory-card PCA, and then remove the memory-card PCA cover.

Figure 6-130 Remove the memory-card cover and PCA (6 of 7)

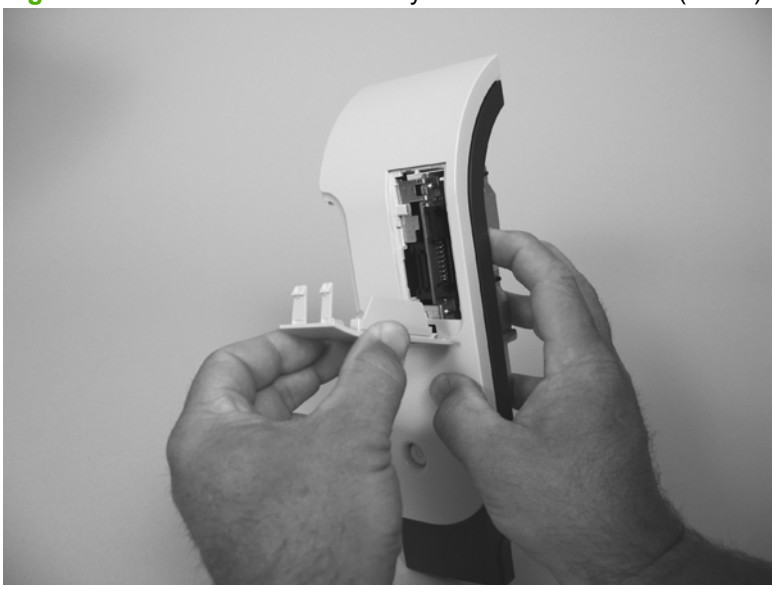

8. Rotate the memory-card PCA away from the cover to release it, and then remove the PCA.

NOTE: Before you remove the PCA, look at how it is installed in the cover. There are two tabs along the side of the opening in the cover that retain the PCA when the memory-card cover is installed. The PCA fits over the bottom tab, and behind the upper tab.

Figure 6-131 Remove the memory-card cover and PCA (7 of 7)

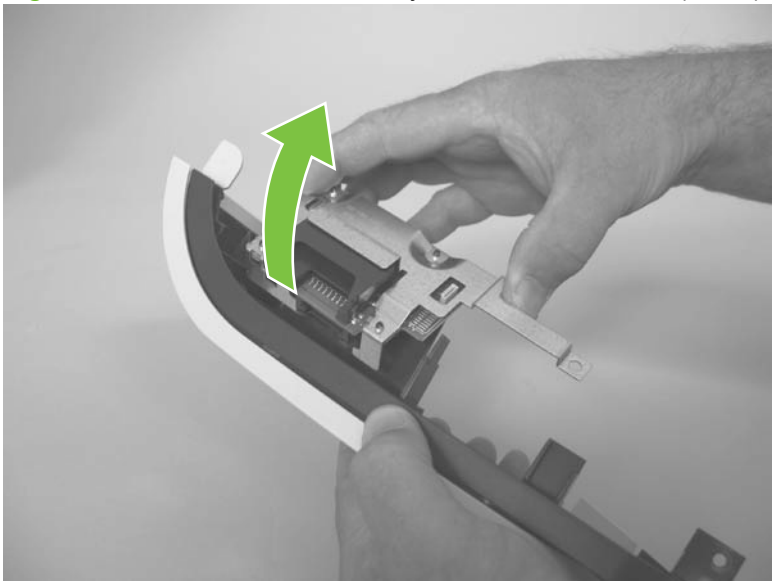

Reinstall the memory-card cover and PCA

1. Install the memory-card PCA and hold it in place on the cover.
2. Insert the tabs on the bottom of the PCA cover into the slots on the right-front cover.

Figure 6-132 Reinstall the memory-card cover and PCA (1 of 2)

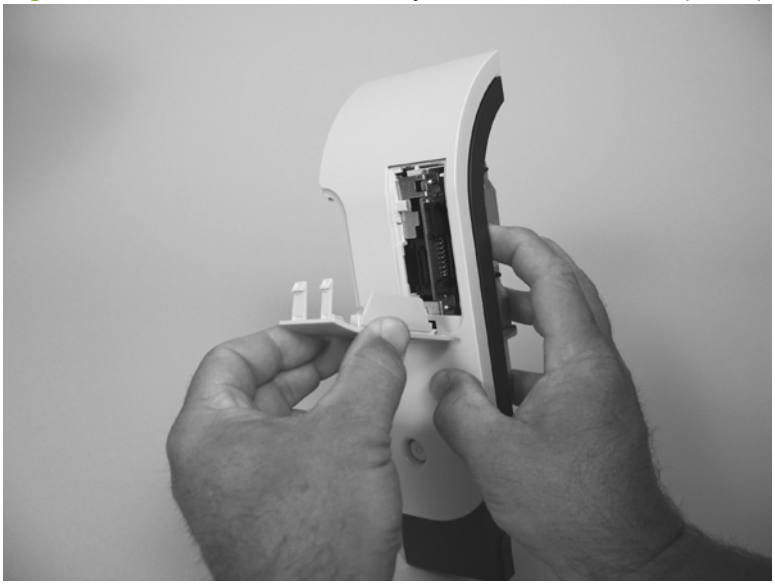

3. Carefully push on the PCA cover until it snaps into place.

NOTE: When the memory-card cover is correctly installed, it securely fastens the PCA to the right-front cover.

Figure 6-133 Reinstall the memory-card cover and PCA (2 of 2)

Front-door assembly

1. Remove the following components:
   - Print-cartridge drawer. See Print-cartridge drawer on page 141
   - Right cover. See Right cover on page 156.
   - Scanner assembly. See Scanner assembly on page 163.
   - Simplex product
     - Rear door. See Rear door (simplex product) on page 152.
     - Rear cover. See Rear cover and feed guide (simplex product) on page 166.
   - Duplex product
     - Rear-upper cover. See Rear-upper cover (duplex product) on page 165.
     - Rear door. See Rear door (duplex product) on page 154.
     - Rear-lower cover. See Rear-lower cover and rear-door links (duplex product) on page 170.
   - Upper-cover assembly. See Upper-cover assembly on page 181.
   - Left cover. See Left cover on page 185.
   - Right-front cover. See Right-front cover and power button on page 197
2. Locate the front-door pin on the left-side door link.

Figure 6-134 Remove the front-door assembly (1 of 10)

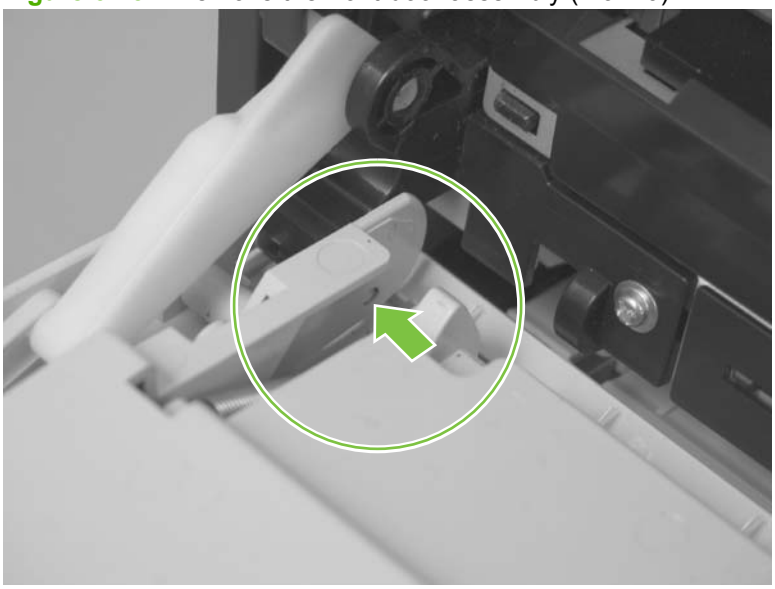

3. Use a precision point screwdriver to push the left-side door pin out of the link.

NOTE: A precision point screwdriver is required to release the front door pins. The width of the blade must be 2 mm (0.08 in) or less to be able to push the door pins out of the mounting holes.

Figure 6-135 Remove the front-door assembly (2 of 10)

4. Use a precision point screwdriver to push the right-side door pin out of the link.

NOTE: A precision point screwdriver is required to release the front door pins. The width of the blade must be 2 mm (0.08 in) or less to be able to push the door pins out of the mounting holes.

Figure 6-136 Remove the front-door assembly (3 of 10)

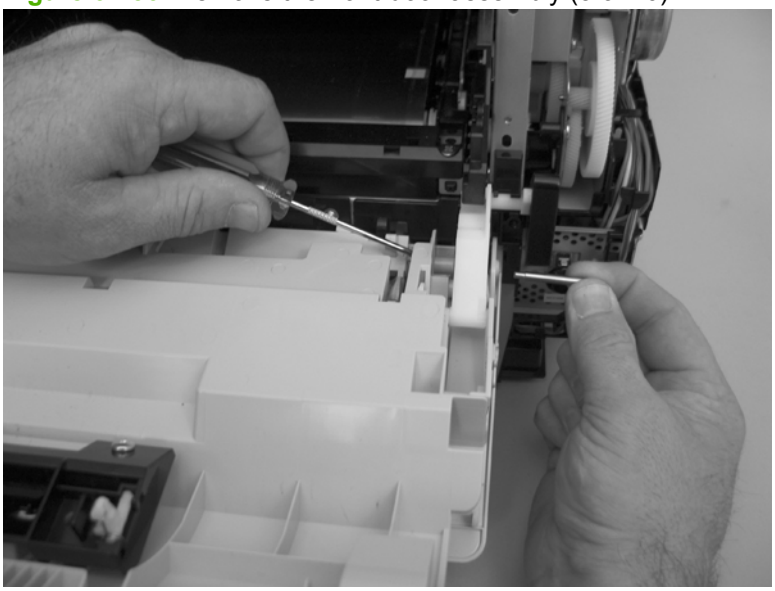

5. Remove two screws (callout 1) and the separate the door bushing (callout 2) from the chassis.

Figure 6-137 Remove the front-door assembly (4 of 10)

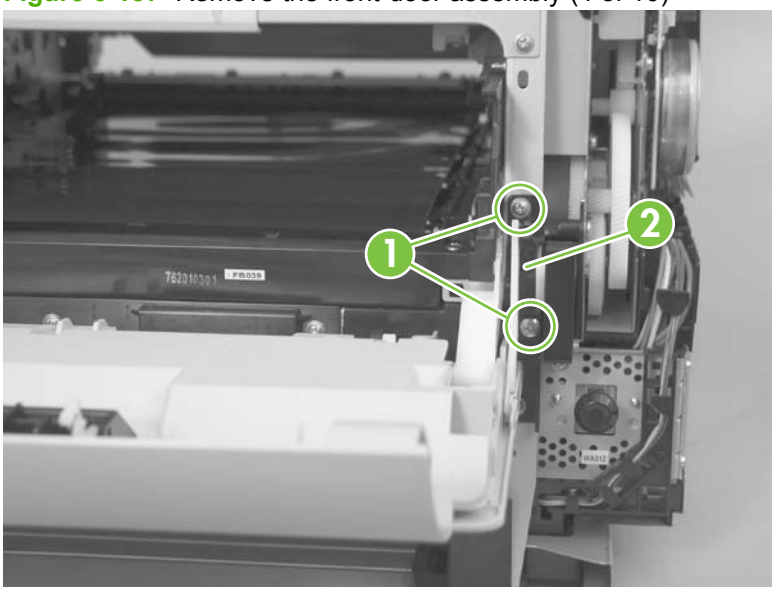

6. Release the bushing from the door-retainer link (callout 3).

Figure 6-138 Remove the front-door assembly (5 of 10)

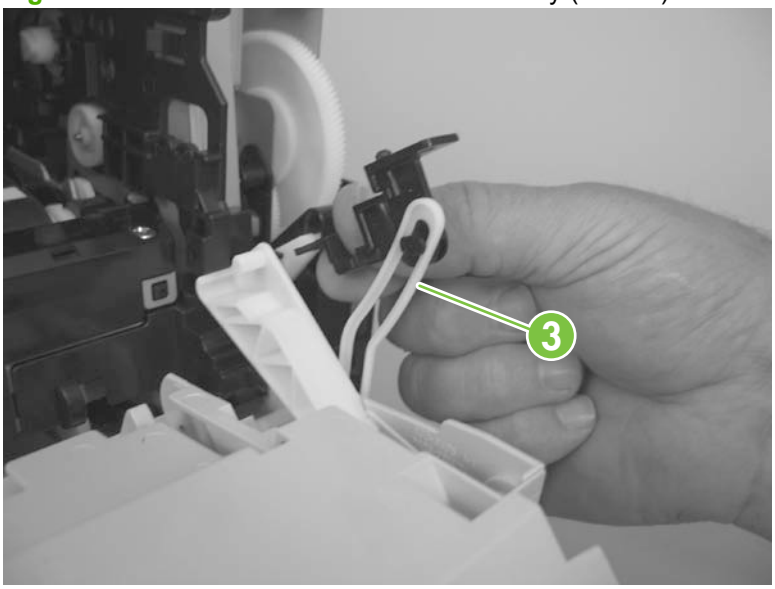

7. Support the door assembly, and carefully release the pin on the right-side link.

Figure 6-139 Remove the front-door assembly (6 of 10)

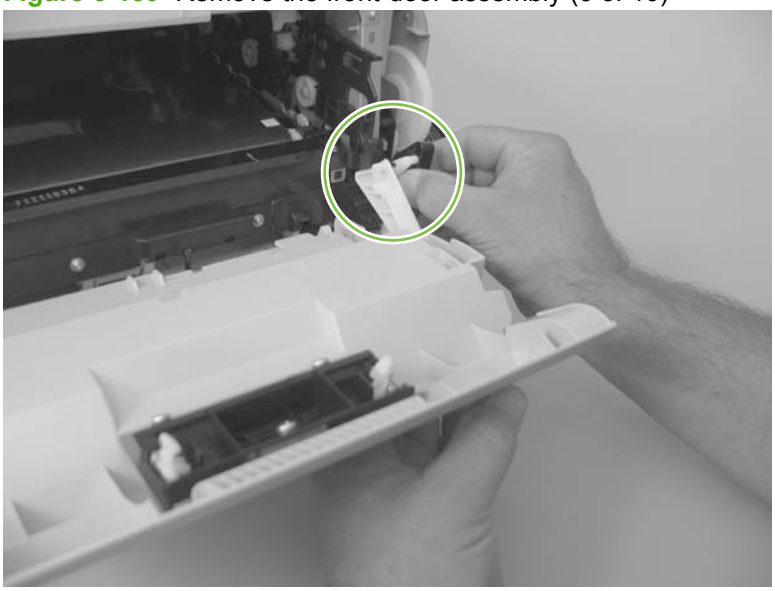

8. Support the door assembly, and carefully release the upper pin on the left-side link.

Figure 6-140 Remove the front-door assembly (7 of 10)

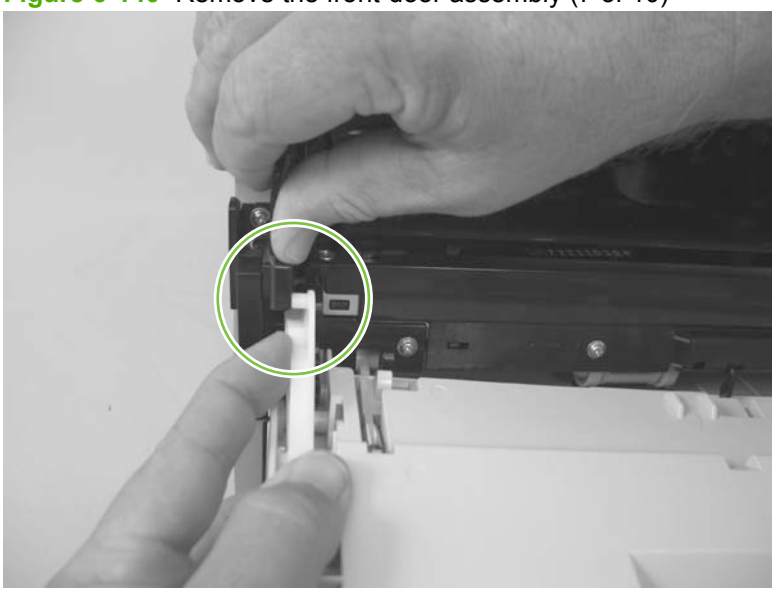

9. Push the black-plastic arm into the product.

Figure 6-141 Remove the front-door assembly (8 of 10)

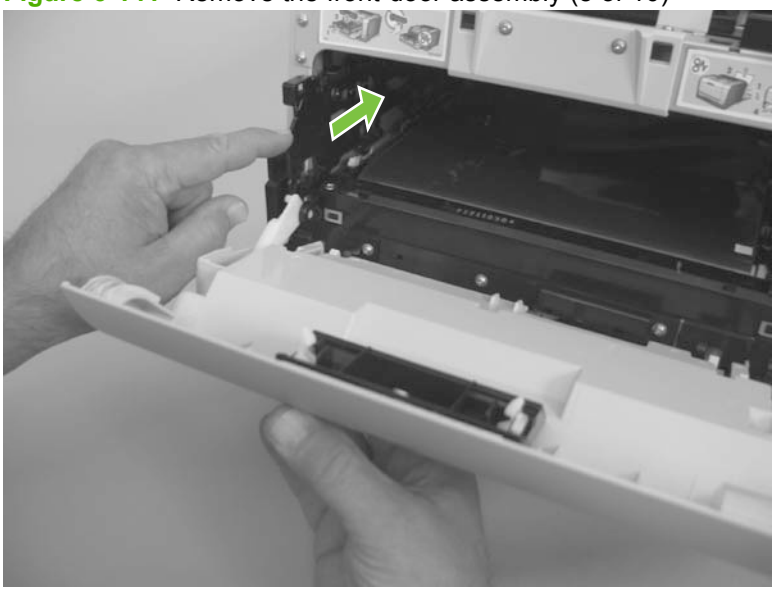

10. Support the door assembly, and carefully release the lower pin on the left-side link.

Figure 6-142 Remove the front-door assembly (9 of 10)

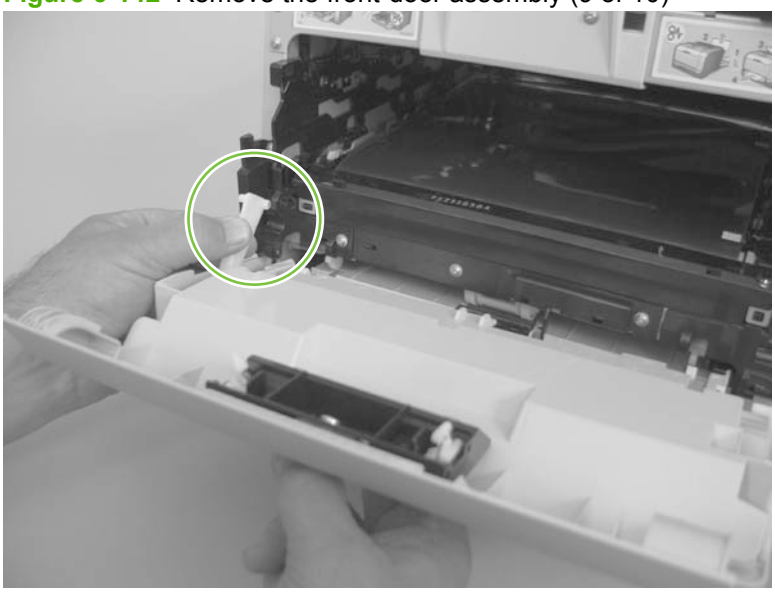

11. Remove the front-door assembly.

Figure 6-143 Remove the front-door assembly (10 of 10)

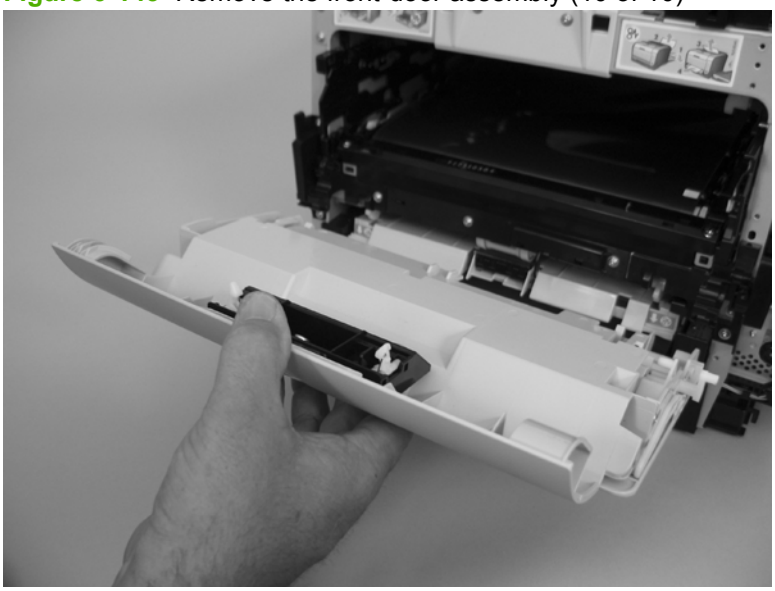

Reinstall the front-door assembly

Use this procedure if you are installing a *replacement* front-door assembly.

1. Open Tray 1, and then rotate the retainer arm (callout 1) until the tabs on the arm-hinge pin align with the slots in the mounting hole on Tray 1.

Figure 6-144 Reinstall the front-door assembly (1 of 2)

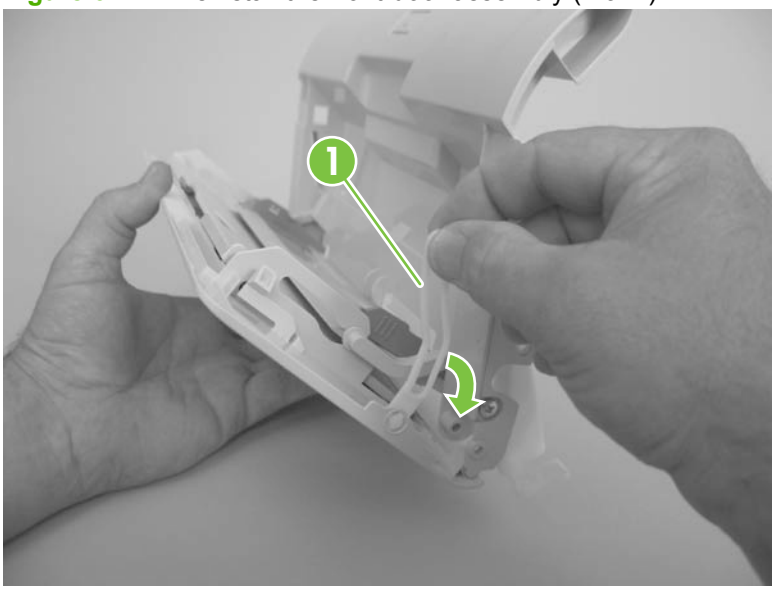

2. Remove the retainer arm from the door assembly, and then install it on the replacement door assembly.

Figure 6-145 Reinstall the front-door assembly (2 of 2)

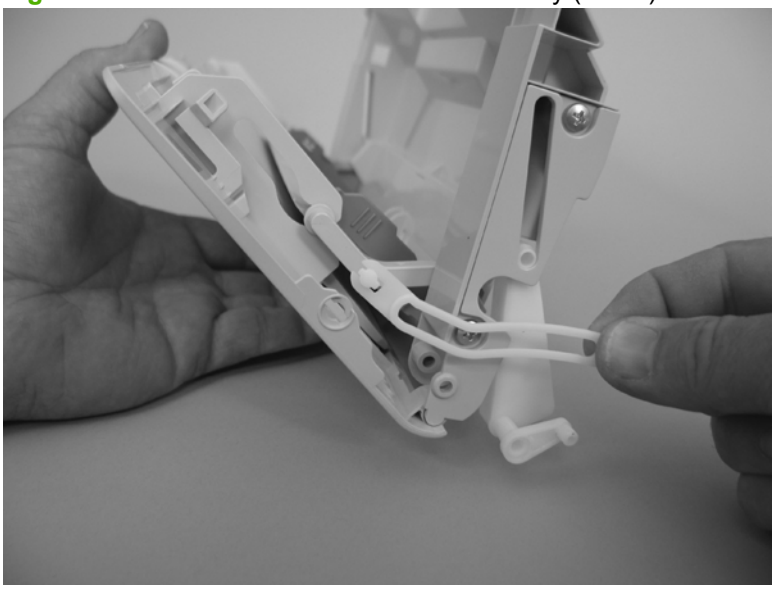

Duplex-reverse drive assembly

1. Remove the following components:
   - Right cover. See Right cover on page 156.
   - Scanner assembly. See Scanner assembly on page 163.
   - Simplex product
     - Rear door. See Rear door (simplex product) on page 152.
     - Rear cover. See Rear cover and feed guide (simplex product) on page 166.
   - Duplex product
     - Rear-upper cover. See Rear-upper cover (duplex product) on page 165.
     - Rear door. See Rear door (duplex product) on page 154.
     - Rear-lower cover. See Rear-lower cover and rear-door links (duplex product) on page 170.
   - Upper-cover assembly. See Upper-cover assembly on page 181.
2. Disconnect two connectors (callout 1), and then pass the connectors under the rear-door rib assembly.

Figure 6-146 Remove the duplex-reverse drive assembly (1 of 4)

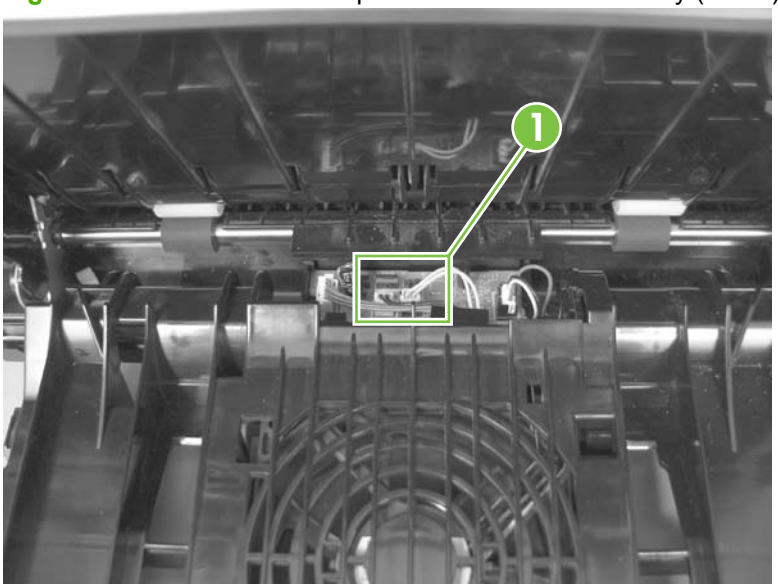

3. Release the wire harnesses from the retainer (callout 2).

Figure 6-147 Remove the duplex-reverse drive assembly (2 of 4)

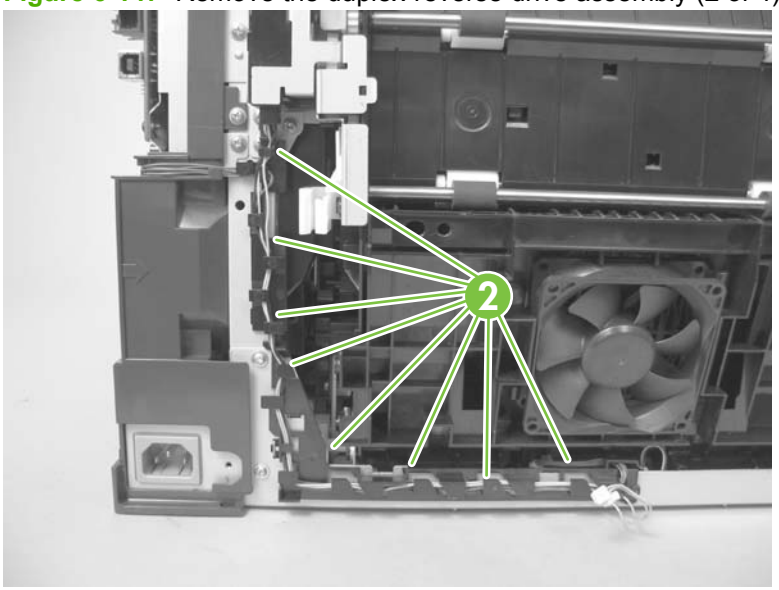

4. Remove three screws (callout 3).

Figure 6-148 Remove the duplex-reverse drive assembly (3 of 4)

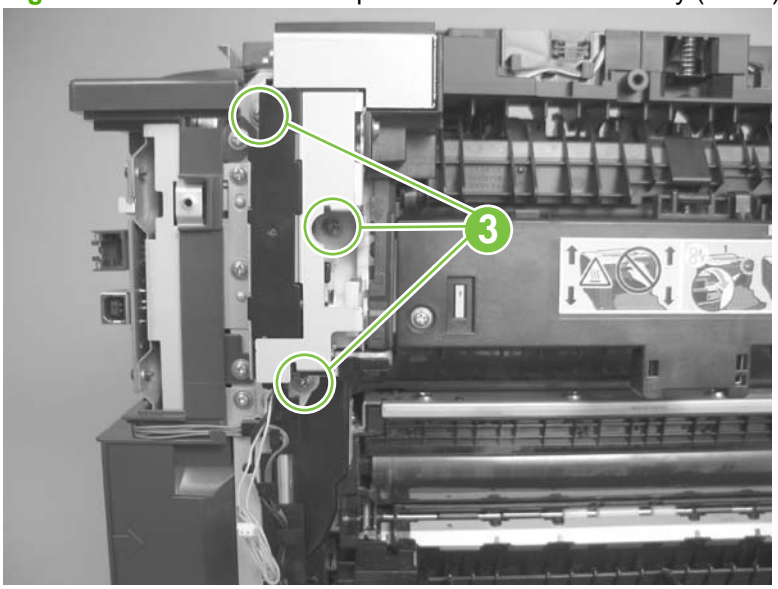

5. Remove the duplex-reverse drive assembly.

Figure 6-149 Remove the duplex-reverse drive assembly (4 of 4)

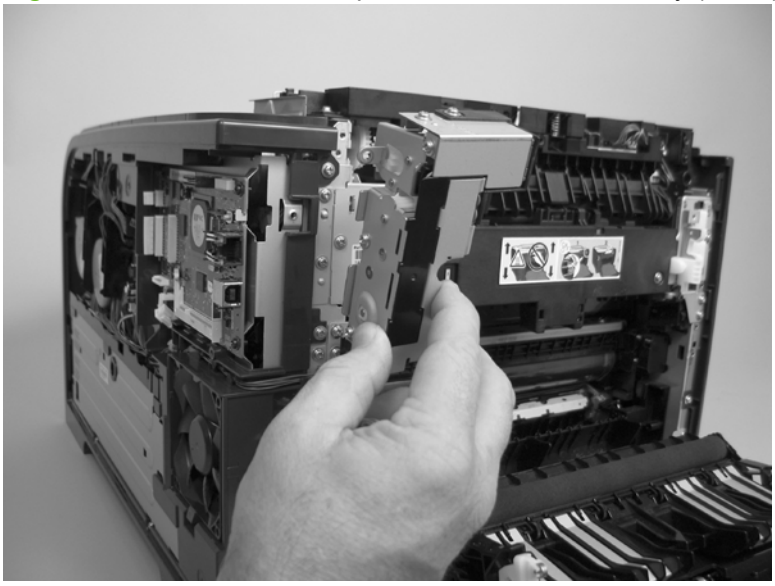

Fuser

⚠ **WARNING!** The fuser might be very hot. After turning off the product power, allow the fuser to cool for at least 5 minutes before removing it.

NOTE: The fuser can be removed without removing the scanner assembly and the upper-cover assembly. However, it might be easier to access some of the connectors with these components removed.

1. Remove the following components:
   - Right cover. See Right cover on page 156.
   - Scanner assembly. See Scanner assembly on page 163.
   - Simplex product
     - Rear door. See Rear door (simplex product) on page 152.
     - Rear cover. See Rear cover and feed guide (simplex product) on page 166.
   - Duplex product
     - Rear-upper cover. See Rear-upper cover (duplex product) on page 165.
     - Rear door. See Rear door (duplex product) on page 154.
     - Rear-lower cover. See Rear-lower cover and rear-door links (duplex product) on page 170.
   - Upper-cover assembly. See Upper-cover assembly on page 181.
   - Left cover. See Left cover on page 185.

2. **Duplex models only**: Remove three screws (callout 1) and separate the duplex-reverse drive assembly from the product.

△ **CAUTION:** The duplex-reverse drive assembly is still attached to the product. Carefully set the assembly out of the way.

Figure 6-150 Remove the fuser (1 of 8)

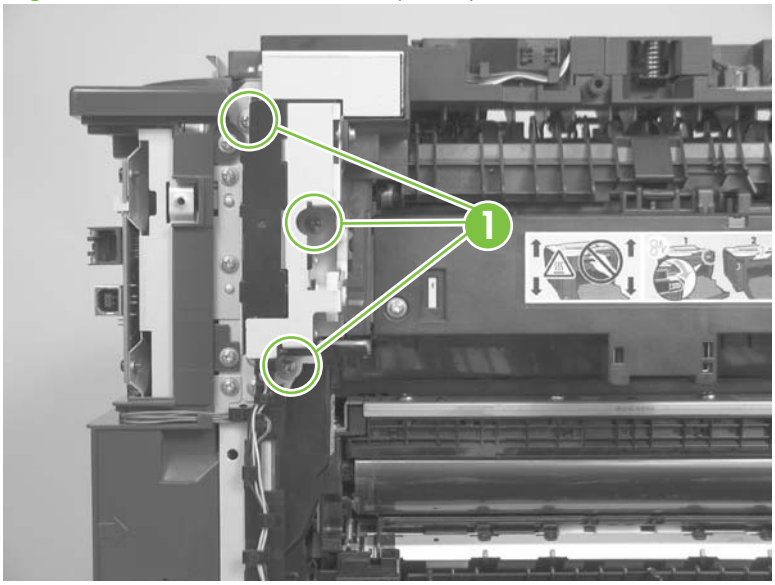

3. Disconnect two connectors (callout 2), and then release the wire harnesses from the guide (callout 3).

Reinstallation tip When the upper cover is reinstalled, make sure that these wire harnesses (near the connectors) are correctly routed under the cover.

Figure 6-151 Remove the fuser (2 of 8)

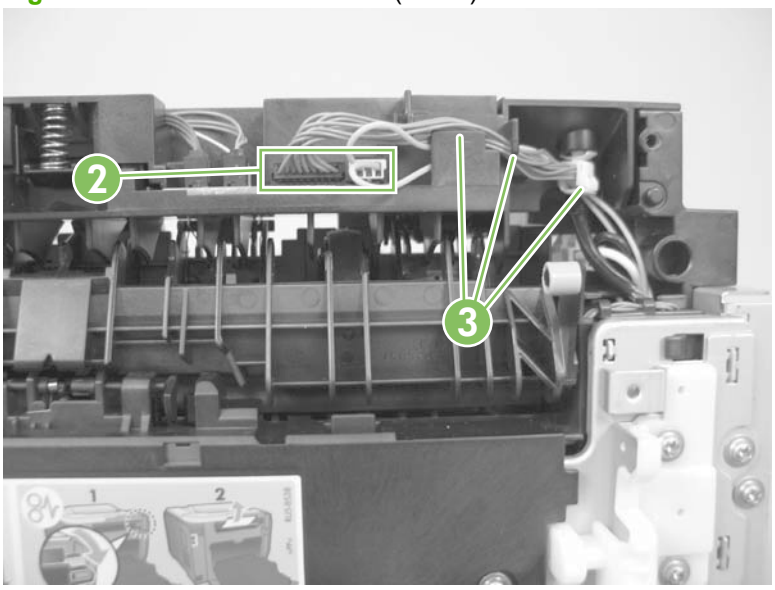

4. Disconnect one connector (callout 4).

Figure 6-152 Remove the fuser (3 of 8)

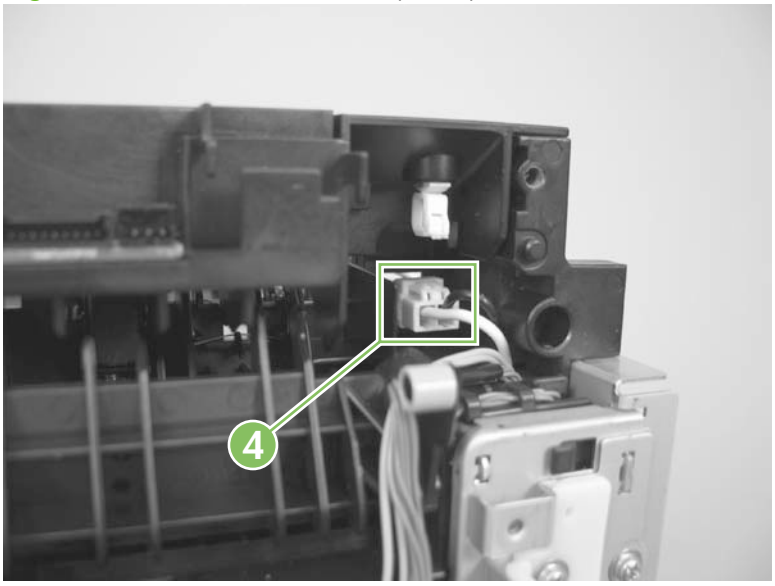

5. *Before you proceed*, look at Figure 6-153 Remove the fuser (4 of 8) on page 217. In the following step, the connector and guide will be separated from the fuser. You **must not** use too much force and damage the lower portion of the guide. If the guide is damaged, the fuser must be replaced.

Figure 6-153 Remove the fuser (4 of 8)

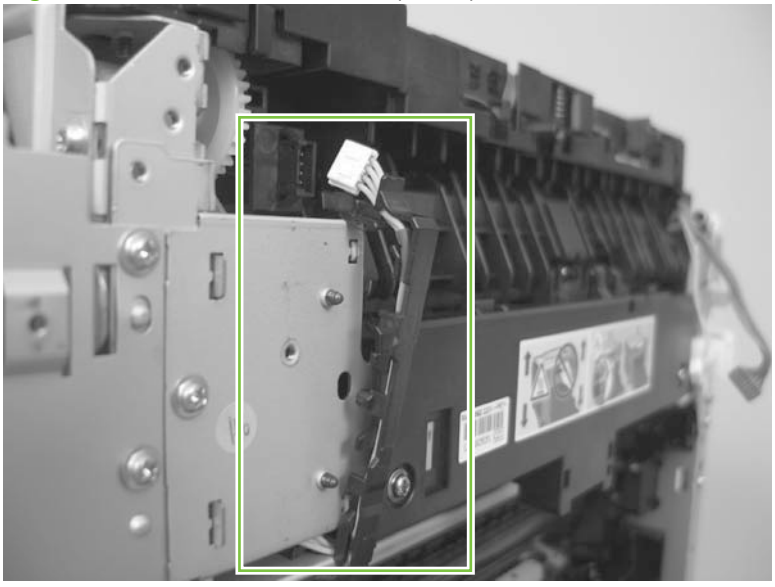

6. Carefully disconnect one connector and rotate the connector and the top portion of the guide away from the fuser (callout 5).

⚠ **WARNING!** Do not separate the connector and guide more than is shown in Figure 6-153 Remove the fuser (4 of 8) on page 217. If the guide is damaged, you must replace the fuser. Also, be cautious with the short, fragile connector.

Figure 6-154 Remove the fuser (5 of 8)

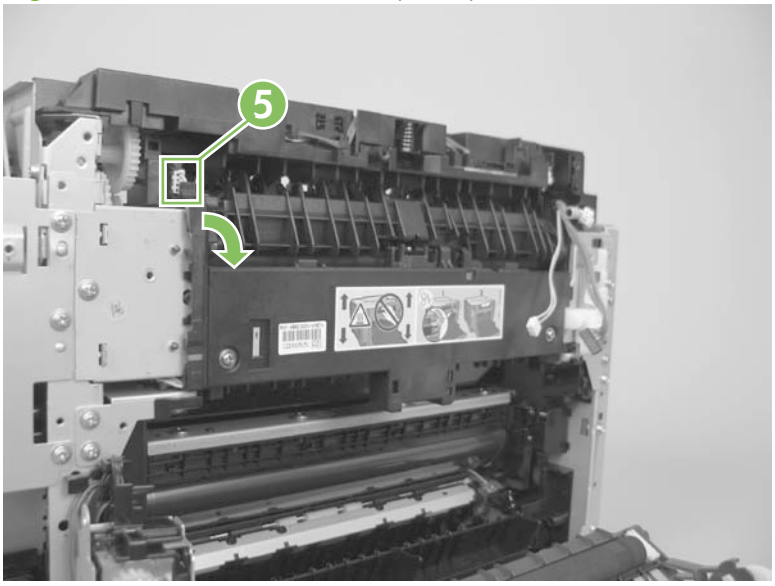

7. Remove two screws (callout 6).

Figure 6-155 Remove the fuser (6 of 8)

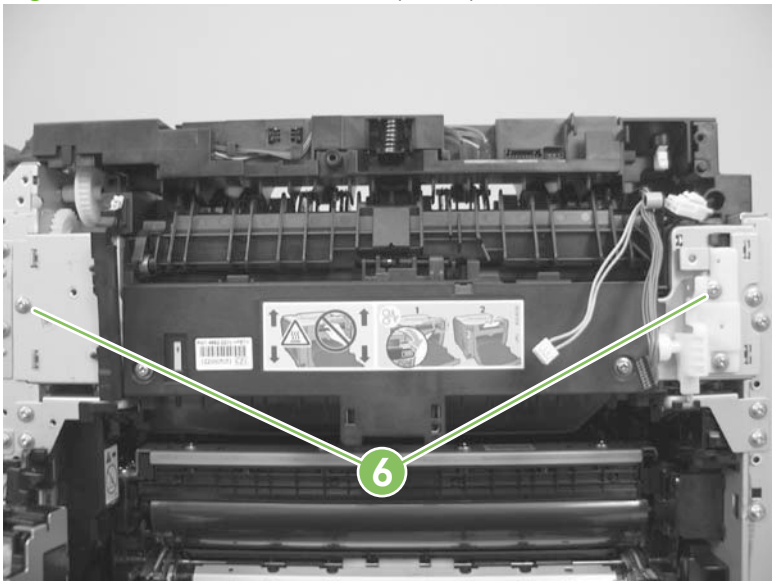

8. Remove the fuser.

Figure 6-156 Remove the fuser (7 of 8)

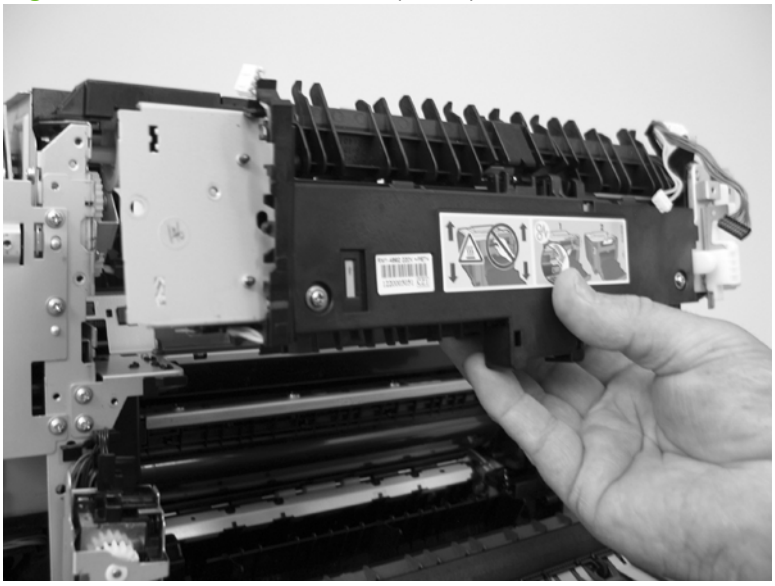

9. **Duplex models only**: Remove two screws (callout 7) and remove the duplex-gear assembly (callout 8). Install the assembly on the replacement fuser.

Figure 6-157 Remove the fuser (8 of 8)

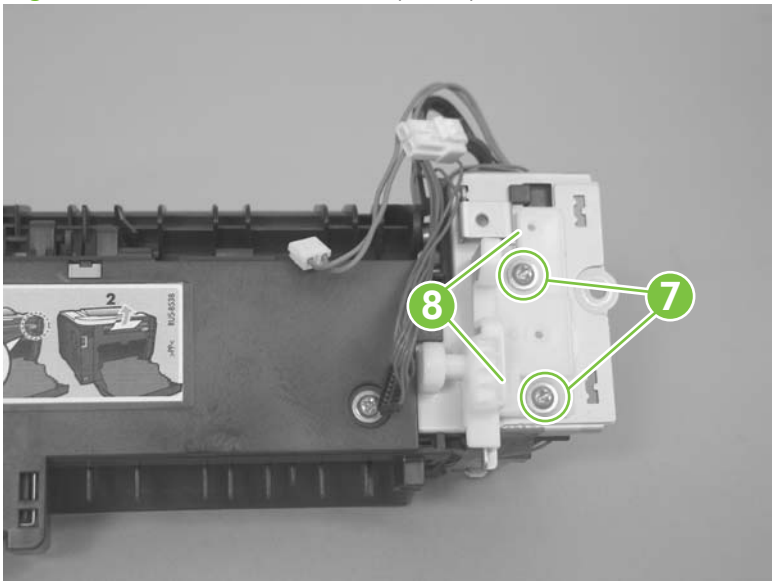

Reinstall the fuser

To reinstalled you must insert the tabs (callout 1) on the fuser frame into the slots on the product chassis (callout 2).

⚠ **WARNING!** The fuser frame must be flush with the product chassis before you install the two fuser mounting screws. **Do not** use the screws to pull the fuser frame against the chassis.

Figure 6-158 Reinstall the fuser

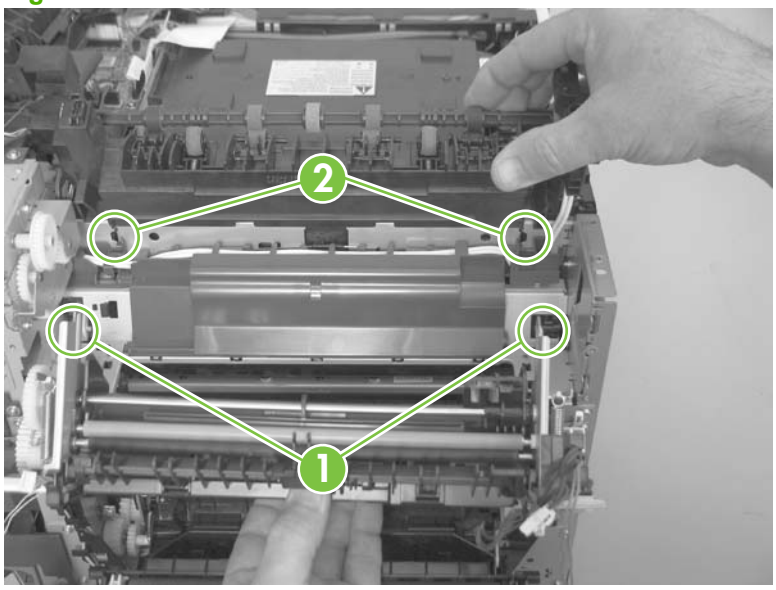

⚠ **WARNING!** Be cautious with the short, fragile five-pin connector on the upper-left part of the fuser.

Paper-delivery assembly

1. Remove the following components:
   - Right cover. See Right cover on page 156.
   - Left cover. See Left cover on page 185.
   - Simplex product
     - Rear door. See Rear door (simplex product) on page 152.
     - Rear cover. See Rear cover and feed guide (simplex product) on page 166.
   - Duplex product
     - Rear-upper cover. See Rear-upper cover (duplex product) on page 165.
     - Rear door. See Rear door (duplex product) on page 154.
     - Rear-lower cover. See Rear-lower cover and rear-door links (duplex product) on page 170.
   - Scanner assembly. See Scanner assembly on page 163.
   - Upper-cover assembly. See Upper-cover assembly on page 181.
2. Disconnect two connectors (callout 1), and then release the wire harnesses from the retainer (callout 2).

Figure 6-159 Remove the paper-delivery assembly (1 of 4)

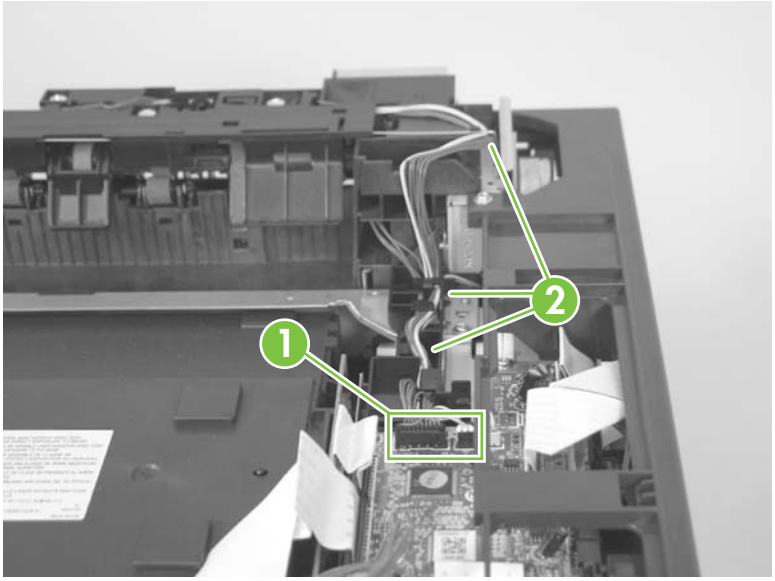

3. Disconnect one connector (callout 3), and then release the wire harness from the wire clip (callout 4).

Figure 6-160 Remove the paper-delivery assembly (2 of 4)

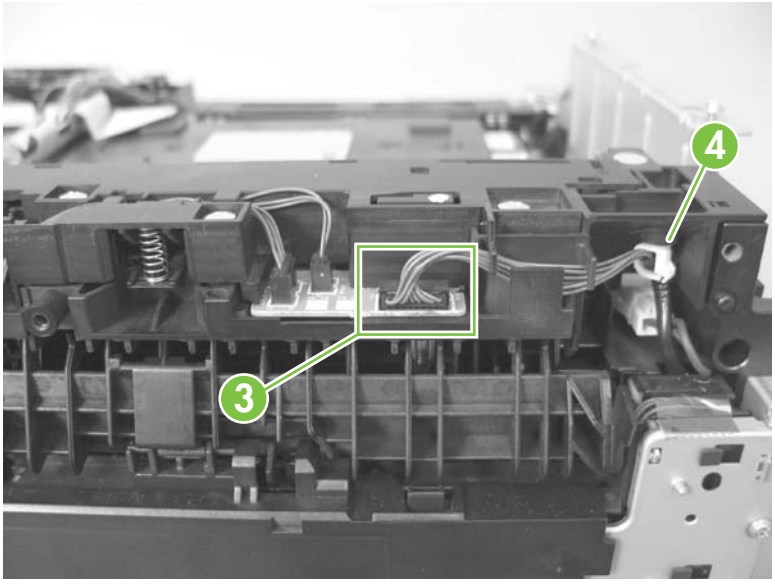

4. Remove three screws (callout 5).

Figure 6-161 Remove the paper-delivery assembly (3 of 4)

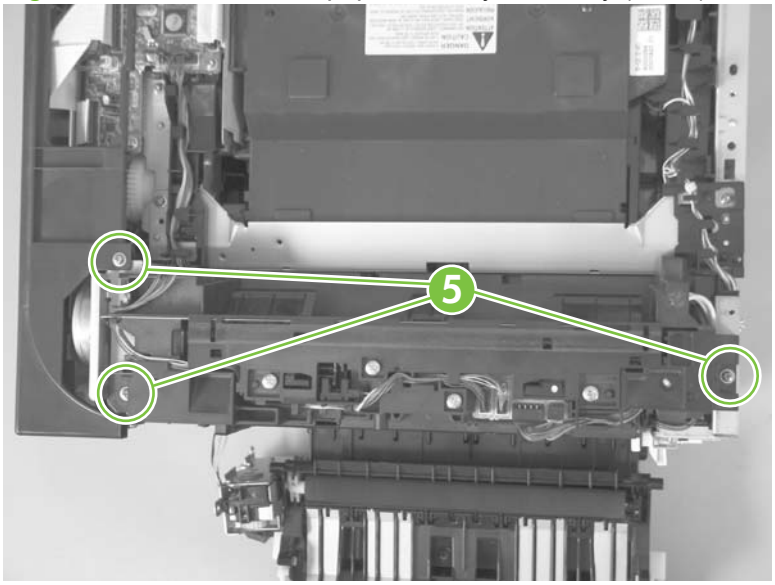

5. Remove the paper-delivery assembly.

Figure 6-162 Remove the paper-delivery assembly (4 of 4)

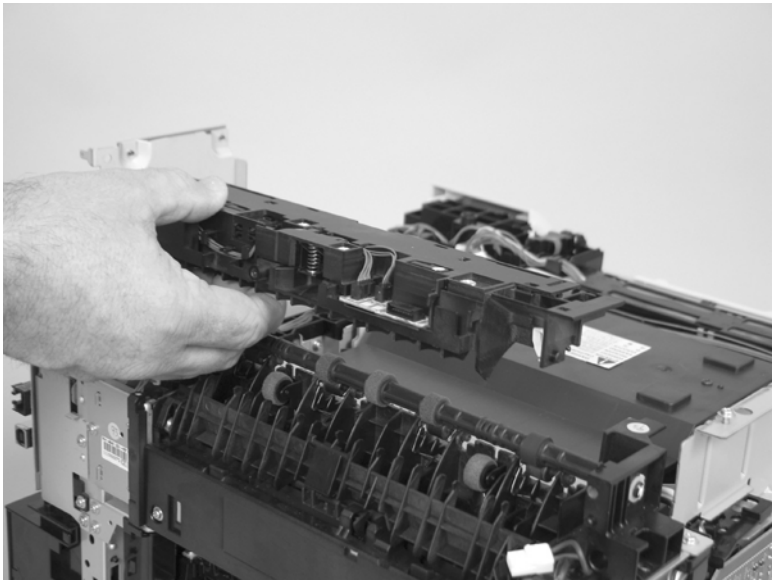

7 Problem solve

To use the information in this chapter, you should have a basic understanding of the HP LaserJet printing process. Explanations of each mechanical assembly, the printer systems, and the basic theory of operation are contained in Theory of operation on page 81. Do not perform any of these troubleshooting processes unless you understand the function of each product component.

Menu map

Print a menu map to find sub-menus and troubleshooting tools in the product menus.

1. Press Setup to open the menus.
2. Use the arrow buttons to select **Reports**, and then press OK.
3. Use the arrow buttons to select **Menu structure**, and then press OK to print the report.
4. Press Cancel to exit the menus.

Troubleshooting process

When the product malfunctions or encounters an unexpected situation, the product control panel alerts you to the situation. This chapter contains information to help diagnose and solve problems.

- Use the pre-troubleshooting checklist to evaluate the source of the problem and to reduce the number of steps that are required to fix the problem.
- Use the troubleshooting flowchart to pinpoint the root cause of hardware malfunctions. The flowchart guides you to the section of this chapter that contains steps for correcting the malfunction.

Before beginning any troubleshooting procedure, check the following issues:

- Are supply items within their rated life?
- Does the configuration page reveal any configuration errors?

NOTE: The customer is responsible for checking supplies and for using supplies that are in good condition.

Pre-troubleshooting checklist

The following table includes basic questions to ask the customer to quickly help define the problem(s).

General topic	Questions
Environment	• Is the product installed on a solid, level surface (+/- 1°)? • Is the power-supply voltage within ± 10 volts of the specified power source? • Is the power-supply plug inserted in the product and the outlet? • Is the operating environment within the specified parameters? See Environmental specifications on page 378. • Is the product exposed to direct sunlight?
Media	• Does the customer use only supported media? • Is the media in good condition (no curls, folds, or distortion)? • Is the media stored correctly and within environmental limits?
Input trays	• Is the amount of media in the tray within specifications? • Is the media correctly placed in the tray? • Are the paper guides aligned with the stack? • Is the input tray correctly installed in the product?
Print cartridges	• Is each HP Genuine print cartridge installed correctly? • Was a print cartridge opened soon after being moved from a cold to a warm room? If so, allow the print cartridge to sit at room temperature for 1 to 2 hours.
Covers	• Is the front cover closed?

General topic	Questions
Condensation	• Does condensation occur following a temperature change (particularly in winter following cold storage)? If so, wipe affected parts dry or leave the product on for 10 to 20 minutes.
Miscellaneous	• Check for and remove any non-HP components (print cartridges, memory modules, and EIO cards) from the product. • Remove the product from the network and ensure that the failure is associated with the product before beginning troubleshooting. • For any print-quality issues, calibrate the product.

Power-on checks

When you turn on the product, if it does not make any sound or if the control-panel display is blank, check the following items:

- Verify that the product is plugged directly into an active electrical outlet that has the correct voltage. Do not plug the product into a surge protector or power strip.
- Verify that the on/off switch is in the ON position.

Troubleshooting tools

The section describes the tools that can help you solve problems with the product.

LED diagnostics

Network LEDs (network models only)

The onboard network solution has two network port LEDs. When the product is connected to a properly working network through a network cable, the yellow LED indicates network activity, and the green LED indicates the link status. A blinking yellow LED indicates network traffic. If the green LED is off, a link has failed.

For link failures, check all of the network cable connections. In addition, you can try to manually configure the link settings on the onboard network solution by using the product control-panel menus.

1. Press Setup 🔧.
2. Use the arrow buttons to highlight **Network config.**, and then press OK.
3. Use the arrow buttons to highlight **Link speed**, and then press OK.
4. Select the appropriate link speed, and then press OK.

Control panel LEDs

The state of the Ready light and Attention light on the product signal the product status. The following table outlines the possible control-panel light states.

Product state	Ready light state	Attention light state
Initializing	Blinking	Blinking
Ready	On	Off
Receiving data/processing job or cancelling job	Blinking	Off
Error message	Off	Blinking
Fatal error (49 or 79 error)[1]	On	On

[1] The product will power off and then power on after one of these errors occurs.

Memory card LED (memory-card models only)

When a memory card is inserted into the correct memory-card slot, this LED turns on. If the LED is not lighting, try the following actions:

- Make sure that the memory card is in the correct slot.
- Make sure that the memory card is not defective.
- Verify that the flat flexible cable connection from the formatter to the memory-card reader assembly is firmly connected.
- If the card is not defective and the card is in the correct slot, the circuit board might have been inadvertently damaged by an electrostatic discharge from someone inserting a memory card. If this

is the case, replace the memory-card reader assembly. If the error still occurs, replace the formatter.

Control-panel diagnostics

The product includes diagnostic tests for the control panel.

Test the control-panel display

1. Press Setup 🔧.
2. Press both the left arrow button ◄ and the Cancel button ✖ at the same time.
3. Press Setup 🔧 to return to the main menus.
4. Use the arrow buttons to highlight **2ndry Service**, and then press OK.
5. Use the arrow buttons to highlight **Display test**, and then press OK.

Test the control-panel buttons

1. Press Setup 🔧.
2. Press both the left arrow button ◄ and the Cancel button ✖ at the same time.
3. Press Setup 🔧 to return to the main menus.
4. Use the arrow buttons to highlight **2ndry Service**, and then press OK.
5. Use the arrow buttons to highlight **Button Test**, and then press OK.

Fax reports

This section describes the fax reports that help you diagnose and solve problems with the product.

Fax activity log

The fax activity log provides a chronological history of the last 40 faxes that were received, sent, or deleted, and any errors that occurred.

1. On the product control panel, press Fax Menu.
2. Use the arrow buttons to select **Fax Reports**, and then press OK.
3. Use the arrow buttons to select **Fax Activity log**, and then press OK.
4. Press OK to select **Print log now**. The product exits the menu settings and prints the log.

Fax call report

A fax call report is a brief report that indicates the status of the last fax that was sent or received.

1. On the product control panel, press Fax Menu.
2. Use the arrow buttons to select **Fax Reports**, and then press OK.
3. Use the arrow buttons to select **Last Call Report**, and then press OK. The product exits the menu settings and prints the report.

T.30 protocol trace

Use a T.30 protocol trace report to troubleshoot fax transmission issues.

Send a fax from the product or receive a fax to the product from another fax machine, and then print a T.30 trace report after the fax prints.

1. On the product control panel, press Setup.
2. Use the arrow buttons to select **Service**, and then press OK.
3. Use the arrow buttons to select **Fax Service**, and then press OK.
4. Use the arrow buttons to select **Print T.30 trace**, and then press OK.

   The product exits the menu settings and prints the reports.

   Explanations of some of the report's column headings follow:

   - **Date** and **Time** identify when the fax begins.
   - **Type** is the type of fax activity: send or receive.
   - **Identification** is the phone number to which a fax is sent.
   - **Result** explains the status of the fax:
     - "OK" means that the fax was successful.
     - "Pending" faxes are in memory or are printing.
     - An error code means that the product might need service. The following tables, Table 7-1 Fax receive error codes on page 231 and Table 7-2 Fax send error codes on page 235, define the error codes.

NOTE: These codes also appear in the fax call report and the fax activity log.

Table 7-1 Fax receive error codes

Error code	Description	Solution
200	The fax session has completed without errors.	N/A
221	User has pressed the Cancel button, causing the fax session to be prematurely halted.	Have the sender resend the fax.
222	The receiving product has answered a call but has been unable to detect the presence of a calling fax product for one of the following reasons: • Typically this will be due to the receiving fax product answering a voice call. • The sender canceled the fax transmission by pressing the Cancel button immediately prior to, or just as the receiving product answered the call.	1. Confirm that the sender is a fax product and not a voice caller—typically you must rely on the sender informing the caller that the fax session is failing. 2. If the sending product ends the call just as the receiving product starts reception, reduce the ring count after which the receiving product answers. Alternatively suggest that the sender manually dials to the receiving product and then manually starts the fax session, by pressing the Start Fax button once fax tones have been heard from the receiving product. 3. Confirm that the sender is not inadvertently attempting to poll transmit from the receiving

Table 7-1 Fax receive error codes (continued)

Error code	Description	Solution
	• The sending product automatically ended the call immediately prior to, or just as the receiving product answered the call. • The sending (sending) fax product determined there was a feature incompatibility between the two and disconnected immediately before transmitting any further fax tones or T.30 frames. (This is very rare.)	product, instead of transmitting to the receiving product. **4.** Reconfigure the receiving fax product to use different configuration settings, toggle the ECM state, and/or select a slower reception speed.
223 (ECM error)	The receiving product has been unable to receive an entire page even after multiple attempts to re-receive the parts of the page that contain errors. This is usually due to extremely poor line conditions.	**1.** Reattempt the fax reception at a different time when telephone line conditions have improved. **2.** If the error persists, disable ECM. Errors may still occur, and may result in degraded image quality on the received page. However, the ability to receive the entire document will be improved.
224	The receiving product has received one or more pages with excessive errors. This is usually due to extremely poor line conditions. Error correction is not used during this session so errors are not corrected.	Reattempt the fax reception at a different time when telephone line conditions have improved.
225	The sending product has attempted to initiate a sending diagnostic session with this product even though sending diagnostic access is disabled.	Enable the sending diagnostics capability on the receiving product.
226	The sending product has attempted to initiate a sending diagnostic session with this product but the sending diagnostic versions supported by the two products are incompatible.	None. Sending diagnostics cannot occur between products with incompatible sending versions.
227	The sending product has attempted to initiate a fax session at a speed and modulation that is not supported by the receiving product.	Reconfigure the receiving product to receive at a slower speed.
228	The sending product has attempted to initiate a poll transmission from the receiving product even though the receiving product is not configured for poll transmission.	**1.** Confirm that polling by the sender is desired. It is possible that the sender has inadvertently attempted to poll. If this is the case reattempt a normal transmission from the sending product. **2.** If polling by the remote user was desired, confirm that the receiving product was correctly configured for poll transmission.
229	The sending product has attempted to initiate a secure poll transmission from the receiving product but has not provided a valid password.	If the sender is the desired recipient for the polled document, confirm that the sender has the correct password, and that the receiving product is configured with the same password.
230	The sending product has attempted to initiate an operation that requires error correction but has not selected error correction for the session.	Enable ECM on both the receiving product and the sending product.
231	The sending product has attempted to initiate a transmission to the receiving product even though the capability to receive is disabled at the receiving product.	Ensure that the receiving product is capable of receiving a document. Check that paper is correctly loaded, paper is not jammed within the product, and any other system abnormalities have been cleared.

Table 7-1 Fax receive error codes (continued)

Error code	Description	Solution
232 233 and 234 235 and 236 (ECM error) 237	One of the following has occurred: • A communication failure has occurred between the two products. • The user at the remote product may have pressed the Cancel button. • The power at the remote product has been interrupted or deliberately turned off, causing the fax session to be interrupted.	1. Re-attempt the fax reception at a different time when telephone line conditions have improved. 2. If the error persists, and error correction is in use for the fax session, disable ECM.
238 239–241	The sending fax product sent an unexpected communication. This is a defect in the sending product.	N/A
242	The sending fax product is attempting to receive instead of send. Both products have attempted to start a reception at the same time. It is possible to accidentally initiate a fax reception after dialing on many products, if there is no paper in the product or if the paper is not correctly loaded and cannot be sensed by the appropriate document sensor.	Ensure that a document is ready and correctly loaded in the sending fax product and that the sending product is attempting to initiate a transmission and not a reception.
243 and 244	One of the following has occurred: • The user of the remote product has pressed the Cancel button, causing the session to be prematurely terminated. • The sending fax product determined there was a feature incompatibility between the two products and has terminated the session. An example would be when the receiving product wanted to initiate polling, but the sending product did not support this mode of operation.	1. Confirm that the sender is not inadvertently attempting to poll transmit from the receiving product, instead of transmitting to the receiving product. This mode of operation must be specially configured on the receiving product. If poll transmission from the receiving product is the desired mode of operation, confirm that the receiving product has been configured for this operation. 2. Reconfigure the receiving fax product to use different configuration settings, toggle the ECM state, and/or select a slower reception speed.
245 and 246 (ECM error)	The user of the sending product has pressed theCancel button, causing the session to be prematurely terminated. The receiving product has been "holding off" the remote product during reception of a large and/or complex document due to lack of available memory. This hold-off time has exceeded the timeout (typically 60 seconds) used by the sending product, and it has terminated the session.	1. If the document was large, ask the sender to retransmit the document as two or more smaller documents. 2. Disable ECM and reattempt the fax reception.
247-251	The sending product appears to be "stuck on."	N/A
252	Telephone line conditions were too poor to receive a fax.	1. Reattempt the fax reception at a later time when line conditions may have improved. 2. Configure the receiving product to start reception at a lower speed. 3. If the receiving product received successfully several pages of a larger document, ask the sender to transmit the document in several smaller parts.

Table 7-1 Fax receive error codes (continued)

Error code	Description	Solution
253	The sending product has attempted to initiate a page transmission using a page width that is not supported by the receiving product.	Ask the sender to reconfigure the fax product to transmit using a "normal" (letter/A4) page width.
281	The receiving product has not received any data at the start of a page during non-ECM reception, although the modem has not detected a sending disconnect. The sending product is probably transmitting fill bytes instead of data and has either jammed or broken.	Reattempt the fax reception after first requesting that the sender check the sending product.
282	The receiving product has not received any data at the start of a page during ECM reception although the modem has not detected a sending disconnect. The sending product is probably transmitting sync frames instead of data and has either jammed or broken.	
283	The receiving product has detected that the modem carrier has stopped. Either the line has been disconnected or the sending product has aborted the transmission.	
284	The receiving product has not received any data during non-ECM page reception and a timeout failure has occurred. The sending product is probably transmitting fill bytes instead of data and has either jammed or broken.	
285	The receiving product has stopped receiving any data during an ECM page reception although the modem has not detected a sending disconnect. The sending product is probably transmitting sync frames instead of data and has either jammed or broken.	
286	The sending product has transmitted invalid data. The receiving product has received frames with errors during an ECM reception and requested retransmission of the errored frames. The data that is resent does not correspond to the data that was requested. This is an implementation error from the sending product.	Disable ECM and reattempt the reception.
290	The sending product has attempted to renegotiate the session mode from ECM to non-ECM between pages. This operation is not supported and the session has been abandoned.	Reattempt the fax reception and split the document into two portions corresponding to the ECM and non-ECM portions. Some products will attempt to use non-ECM for photo mode, so this may be associated with a between-page encoding change to support photo mode.
291	This is not a communication error and it is not expected that this error will occur under non-development scenarios. Reception has failed because the receiving product is unable to open a file to receive data into. May be associated with low memory, although low memory should be handle more gracefully than this.	If the error persists, reinitialize the product.
292	The sending product has attempted to renegotiate the encoding mode from non-JPEG to JPEG. This operation is not supported and the session has been abandoned.	Reattempt the fax reception and split the document into two portions corresponding to the JPEG and non-JPEG portions. Some products will attempt to use JPEG for photo mode, so this may be

Table 7-1 Fax receive error codes (continued)

Error code	Description	Solution
		associated with a between-page encoding change to support photo mode.

Table 7-2 Fax send error codes

Error code	Description	Solution
300	Fax session has completed without errors	N/A
311	The user of the receiving product has pressed the Cancel button, causing the session to be prematurely halted before all pages have been transmitted.	Resend the fax.
312	A sending fax product has failed to answer the call. Specifically fax tones or the fax handshake from a sending product has not been detected. Typically this is due to the user calling the wrong number, the correct number has been called but the product has been configured not to answer, or the sending product has temporarily disabled answering due to a condition such as lack of paper or a paper jam.	Confirm the sending fax product is ready to receive a document and reattempt the transmission.
313	A busy signal has been detected each time the receiving product has attempted to call the sending product.	Reattempt the fax transmission at a later time when the line is no longer busy.
314	The receiving product has attempted to initiate a sending diagnostic session but has detected that sending diagnostics are disabled at the sending product.	Enable sending diagnostics on the sending product.
315	The receiving product has attempted to initiate a sending diagnostic session but has detected that the sending diagnostic version supported by the sending product is incompatible.	No solution. Sending diagnostics cannot occur between products with incompatible sending versions.
316	The receiving product is setup to initiate document transmission, but it has detected that the sending product is not able to receive a document. This error should be very rare since normally a sending product will not answer if it cannot receive a document. On of the few exceptions to this would occur if the sending product was configured to poll transmit a document but was unable to receive.	Configure the sending product for reception. Typically the sender should ensure paper is loaded in the product, paper jams are fixed, and any other system abnormalities are cleared.
317	The sending product cannot support a fax reception at any speed or modulation that is supported by the receiving product.	N/A
318	The sending product cannot support a fax reception at the page width selected by the receiving product.	N/A
319	The receiving product has attempted to initiate a binary file transfer (BFT) but has detected that the sending product does not support this mode of operation.	Do one of the following: • Enable the BFT capability on the sending product if it is supported. • Retransmit the document as a normal fax, rather than attempting a BFT transfer.

Table 7-2 Fax send error codes (continued)

Error code	Description	Solution
320	The receiving product is set up to initiate poll reception with a sending product, but it has detected that the sending product is not configured to do this. Poll transmission from a sending product is typically configured on a session-by-session basis.	Do one of the following: ● Confirm that the receiver really wants to attempt a poll reception. If not, reconfigure the receiving product for a normal fax transmission ● Configure the sending product for poll transmission. The sender must load a document to transmit and then configure the product for polling.
321	There was a communication error with the receiving fax product due to poor telephone line conditions.	Reattempt the fax transmission at a different time when telephone line conditions have improved.
322–324	Telephone line conditions were too poor to send a fax.	**1.** Reattempt the fax transmission at a different time when telephone line conditions have improved. **2.** If the session fails after transmitting several pages of a large document, retransmit the document as several smaller documents.
325-328 (ECM error)	Telephone line conditions were very poor.	**1.** Reattempt the fax transmission at a different time when telephone line conditions have improved. **2.** If the error persists, disable ECM. Errors may still occur, and may result in a degraded image quality on the received page. However, the ability to transmit the entire document will be improved.
329–331	The sending product has reported that one or more pages have been received (non-ECM mode) with excessive errors. This error does not result in the session being terminated immediately. Subsequent page transmission can still occur and later pages may be received without error.	**1.** Reattempt the fax transmission at a different time when telephone line conditions have improved. **2.** If the error persists, select a lower speed for the initial transmission speed.
332–337	There is a defect in the sending fax product.	Send from another product.
338–342 (ECM error)		
343		
344–348	One of the following has occurred: ● The sending product has failed to respond to a fax command from the receiving product due to the connection being interrupted. ● The sender has pressed the Cancel button while the reception was in progress. ● In rare conditions, incompatibility between the two products may cause the sending product to abandon the call.	**1.** Reattempt the fax transmission at a different time when telephone line conditions have improved. **2.** fax session was using error correction, disable ECM.
349-353 (ECM error)		
354 and 355		

Table 7-2 Fax send error codes (continued)

Error code	Description	Solution
356-361 362-366 (ECM error)	One of the following has occurred: • The sender has pressed the Cancel button, causing the session to be aborted. • The sending product has encountered a system problem such as no paper or a paper jam, which has inhibited it from receiving any more pages, and which has caused it to terminate the session prematurely. • A feature incompatibility has been encountered by the sending product, causing it to terminate the session.	1. Configure the sending product for document reception by clearing any paper jams, loading sufficient paper, and clearing any other system errors. 2. Configure the receiving fax product to use different configurations, toggle the ECM state, or select a slower reception speed.
367-372 373-377 (ECM error) 378 and 379	The sending product appears to be "stuck on".	N/A
380	The sending product has failed to issue a valid response to a CTC frame. This occurs during ECM transmission after multiple retransmissions of erred data.	Send from another product.
381	One of the following has occurred: • The sending product has failed to respond to a fax command from the receiving product due to the connection being interrupted. • The sender has pressed the Cancel button while the reception was in progress.	1. Reattempt the fax transmission at a different time when telephone line conditions have improved. 2. If the error persists, disable ECM.
382	The sending fax product has been "holding off" the receiving fax product from continuing the ongoing transmission due to a temporary low memory condition at the sending product. If this "hold-off" period exceeds a product's specific timeout value, the session will terminate.	1. Resend the document as two or more separate fax transmissions. Wait several minutes between the end of one transmission and the start of the next transmission. 2. If the error persists, disable ECM.
383	One of the following has occurred: • The sending product has failed to respond to a fax command from the receiving product due to the connection being interrupted • The sender has pressed the Cancel button while the reception was in progress.	1. Reattempt the fax transmission at a different time when telephone line conditions have improved. 2. If the error persists, disable ECM.
384	The receiving product has attempted a black JPEG transmission to a product that does not support this mode.	Reattempt the fax transmission using a different mode.

Table 7-2 Fax send error codes (continued)

Error code	Description	Solution
386	The receiving product has failed to complete the third phase of the initial V.34 handshake after originating a fax session. This is usually due to poor line conditions although it may be a compatibility issue with certain products and/or line conditions.	1. Reattempt the fax transmission at a different time when telephone line conditions have improved. 2. Disable V.34 on the receiving product and attempt the transmission using the V.17 mode.
387	The receiving product has failed to successfully negotiate the initial V.8 handshake with the sending product after originating a fax session. Typically this will occur when the sending product is not fax capable or has disabled reception. It may also be a compatibility issue with certain products and/or line conditions.	
388	The receiving product has originated a fax session and detected a sending fax product but has been unable to detect any T30 frames. If the product is in V.17 mode it is likely that the connection has been interrupted. In V.34 mode is also possible for this error to occur due to compatibility problems with certain products and/or line conditions.	
389	The receiving product has originated a fax session and has reattempted V.8 negotiations multiple times without success.	
390	The receiving product has originated a fax session using error correction (either V.34 or V.17). Transmission of an image has been abandoned after a timeout when no data has become ready for transmission. This is most likely due to a low memory condition although it could be due to other internal problems that cause generation of data for transmission to stall.	Reattempt the transmission after making sure documents stored in memory are printed and the product has paper ready for printing. If the problem persists reinitialize permanent storage.
391	The receiving product has originated a fax session without error correction (not V.34). Transmission of an image has been abandoned after a timeout when no data has become ready for transmission. This is most likely due to a low memory condition although it could be due to other internal problems that cause generation of data for transmission to stall.	
392	The receiving product has answered a fax session and completed the initial V.34 handshake but has been to detect any T30 frames. This failure is either a compatibility problems with certain products or is due to line conditions.	1. Reattempt the fax reception at a different time when telephone line conditions have improved. 2. Disable V.34 on the receiving product and attempt the transmission using the V.17 mode.
393	The receiving product has failed to complete the third phase of the initial V.34 handshake after answering a fax session. This is usually due to poor line conditions although it may be a compatibility issue with certain products and/or line conditions.	
394	The receiving product has failed to successfully negotiate the initial V.8 handshake with the sending product after answering a fax session. Typically this will occur when the calling product is not fax capable. It may also be a compatibility issue with certain products and/or line conditions.	

Table 7-2 Fax send error codes (continued)

Error code	Description	Solution
395	An unexpected T.30 frame has been received between pages during a multipage V.34 reception. This is almost certainly a compatibility problem with the sending product and may be due to an error with the implementation of the sending product.	**1.** Reattempt the fax reception. If transmission errors are not encountered because line conditions have improved, then this error will probably be avoided. **2.** Disable V.34 on the receiving product and attempt the transmission using the V.17 mode.
396–409	An error occurred during a V.34 transmission when the receiving product was unable to correctly handshake with the sending product and was consequently unable to transmit a T30 frame. This occurs when the line was disconnected or if line conditions degrade during the session.	Reattempt the fax transmission at a different time when telephone line conditions have improved.
410–419	An error occurred during a V.34 reception when the receiving product was unable to correctly handshake with the sending product and was consequently unable to transmit a T30 frame. This occurs when the line is disconnected or if line conditions degrade during the session.	
420	V.34 negotiations have failed from the originating product during phase four, which occurs after V.8 and before the first T.30 frames are exchanged. Compatibility problems have been observed in this area when sending to non-HP units.	
421	V.34 negotiations have failed from the originating product during phase three, which occurs after V.8, before phase four, and before the first T.30 frames are exchanged. Compatibility problems have been observed in this area when sending to non-HP units.	
422	V.34 negotiations have failed from the answering product during phase four, which occurs after V.8 and before the first T.30 frames are exchanged.	
423	V.34 negotiations have failed from the answering product during phase three, which occurs after V.8, before phase4, and before the first T.30 frames are exchanged.	
430	The transmitting product is unable to send continuous ones at the end of the control channel prior to starting the primary channel. This is a V.34 error. This error may be associated with line conditions although it is more likely to be due to internal problems with the modem.	
431	The transmitting product has not received a response after aborting a transmission. Depending upon when the session is aborted, some sending products may not respond. It should be noted that the receiving unit always attempts to abort the session in a way that allows the sending product to respond to the final PPS_EOP.	N/A
440–444	An error occurred during a V.34 transmission after one or more partial pages (image data) were transmitted using the primary channel. The transmitting product was unable to restart the	Reattempt the fax reception at a different time when telephone line conditions have improved.

Table 7-2 Fax send error codes (continued)

Error code	Description	Solution
	control channel in order to resume the T30 handshake. This typically occurs when the receiving product prematurely disconnects during partial page reception, although it is possible it may also be due to compatibility issues.	

Diagrams

Block diagrams

Scanner and automatic document feeder (ADF) assemblies

Figure 7-1 Scanner and ADF assemblies

Table 7-3 Scanner and ADF assemblies

Item	Description
1	Control panel
2	ADF
3	Scanner
4	Memory-card reader (memory-card models only)

Major components

Figure 7-2 Major components

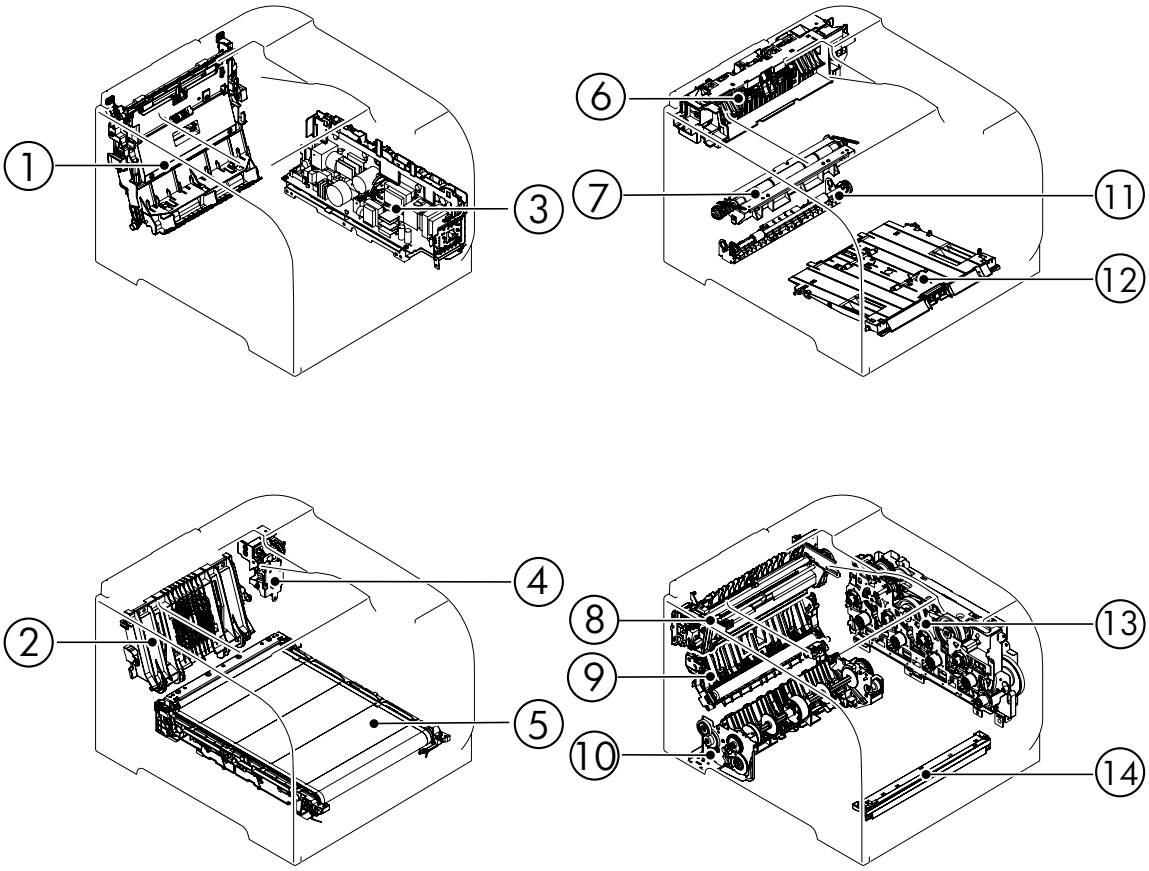

Table 7-4 **Major components**

Item	Description
1	Duplex feed assembly (duplex models only)
2	Rear door rib assembly (duplex models only)
3	Power supply assembly
4	Duplex reverse drive assembly (duplex models only)
5	ITB assembly
6	Delivery assembly
7	Registration assembly
8	Fuser assembly
9	Secondary transfer feed assembly
10	Cassette pickup assembly
11	Duplex re-pickup guide assembly (duplex models only)
12	Multipurpose tray pickup assembly

Table 7-4 Major components (continued)

Item	Description
13	Drive assembly
14	Color misregistration and density sensor

Motors and fans

Figure 7-3 Motors and fans

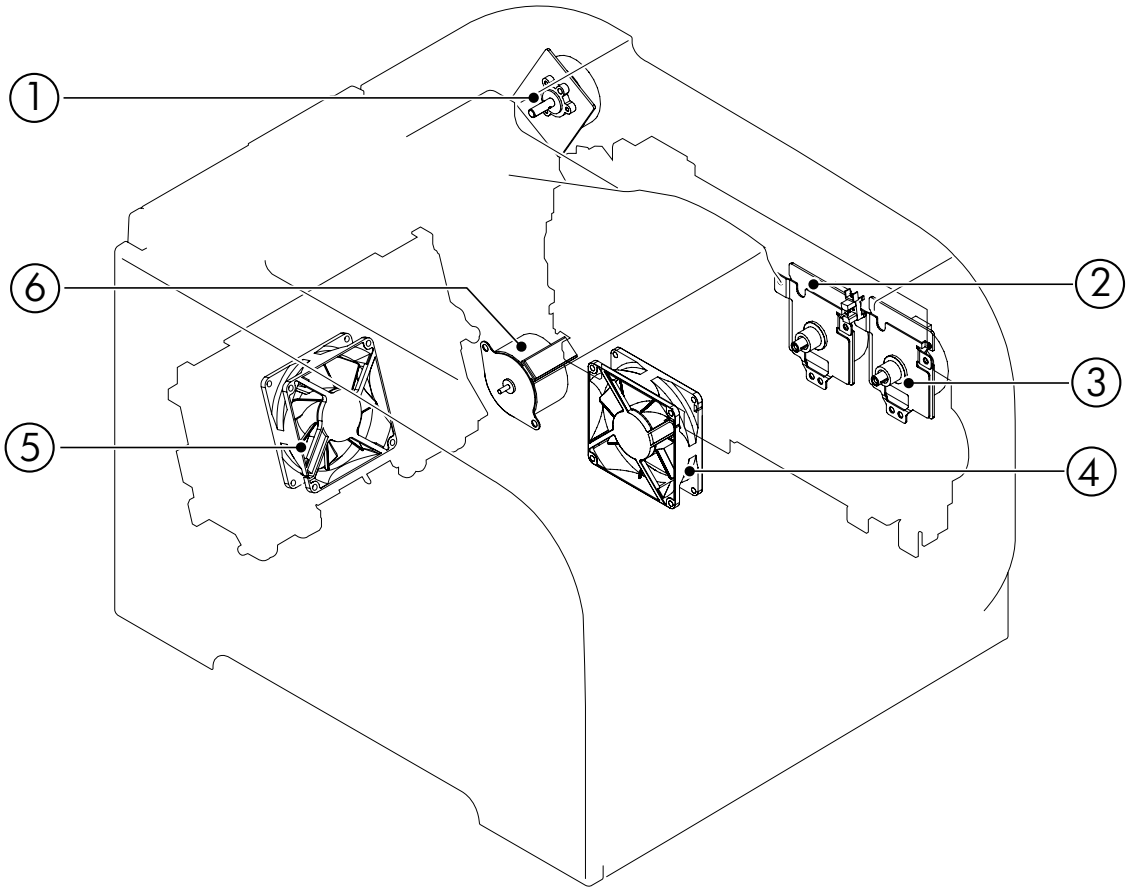

Table 7-5 Solenoid, sensors, and motors

Item	Description
1	Fuser motor
2	Drum motor (M1)
3	Developing motor (M2)
4	Fan 1
5	Fan 2 (duplex models only)
6	Pickup motor

Rollers

Figure 7-4 Rollers

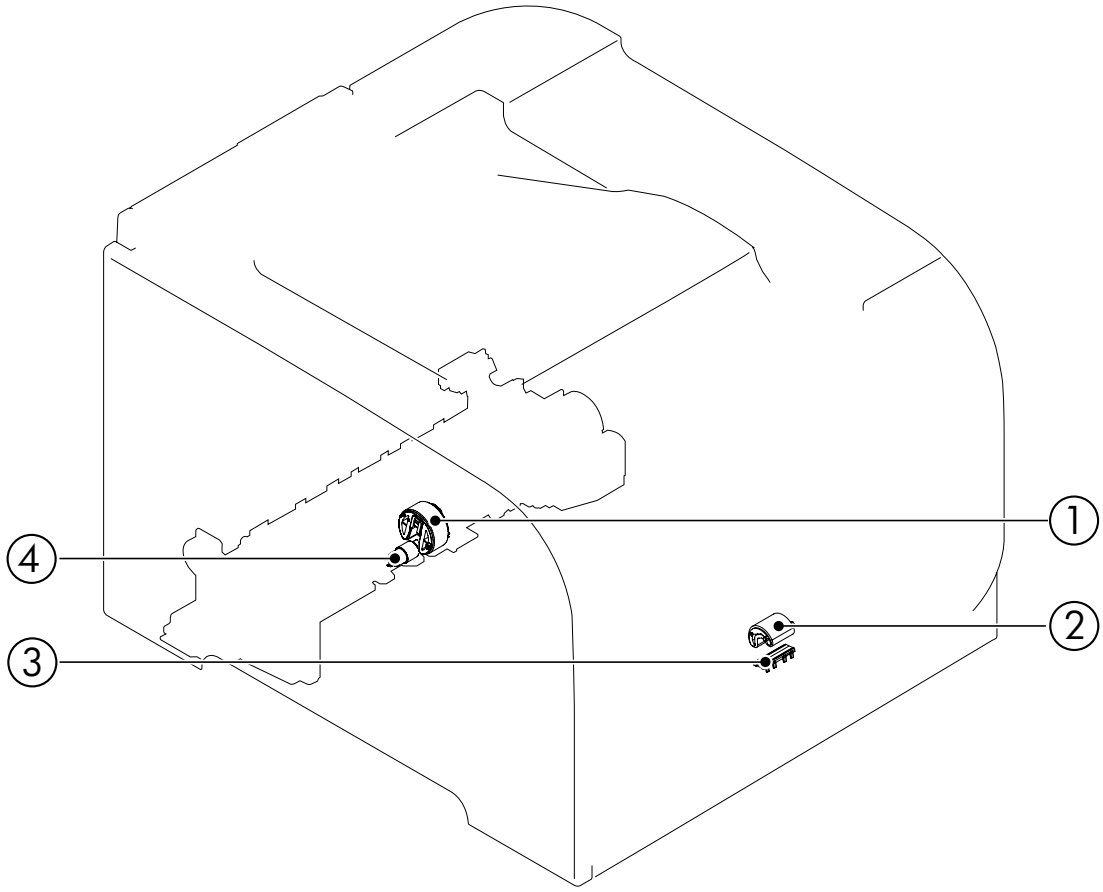

Table 7-6 Rollers

Item	Description
1	Cassette pickup roller
2	Multipurpose tray pickup roller
3	Multipurpose tray separation pad
4	Cassette separation roller

PCAs

Figure 7-5 PCAs

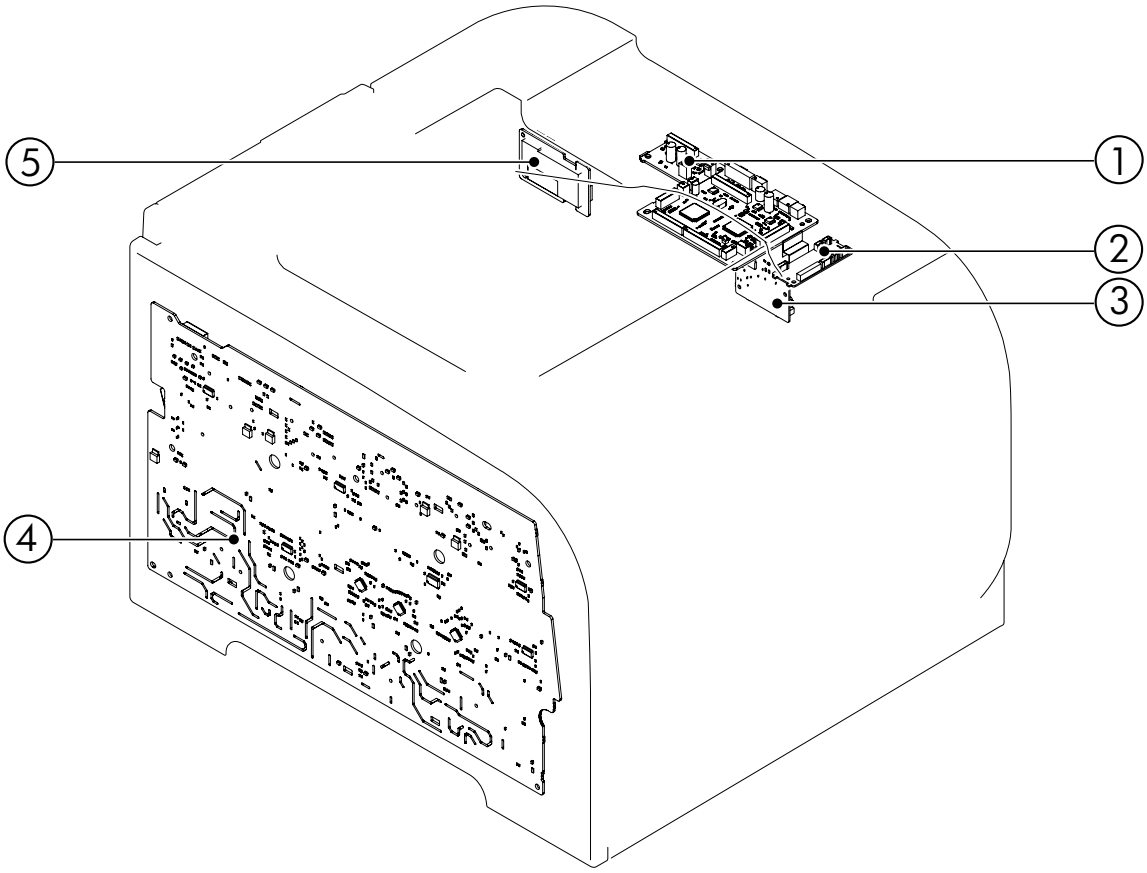

Table 7-7 PCAs

Item	Description
1	DC controller PCA
2	Connector PCA
3	Driver PCA
4	High-voltage power supply PCA
5	Sub power supply PCA

Optional 250-sheet cassette

Figure 7-6 Optional 250-sheet cassette

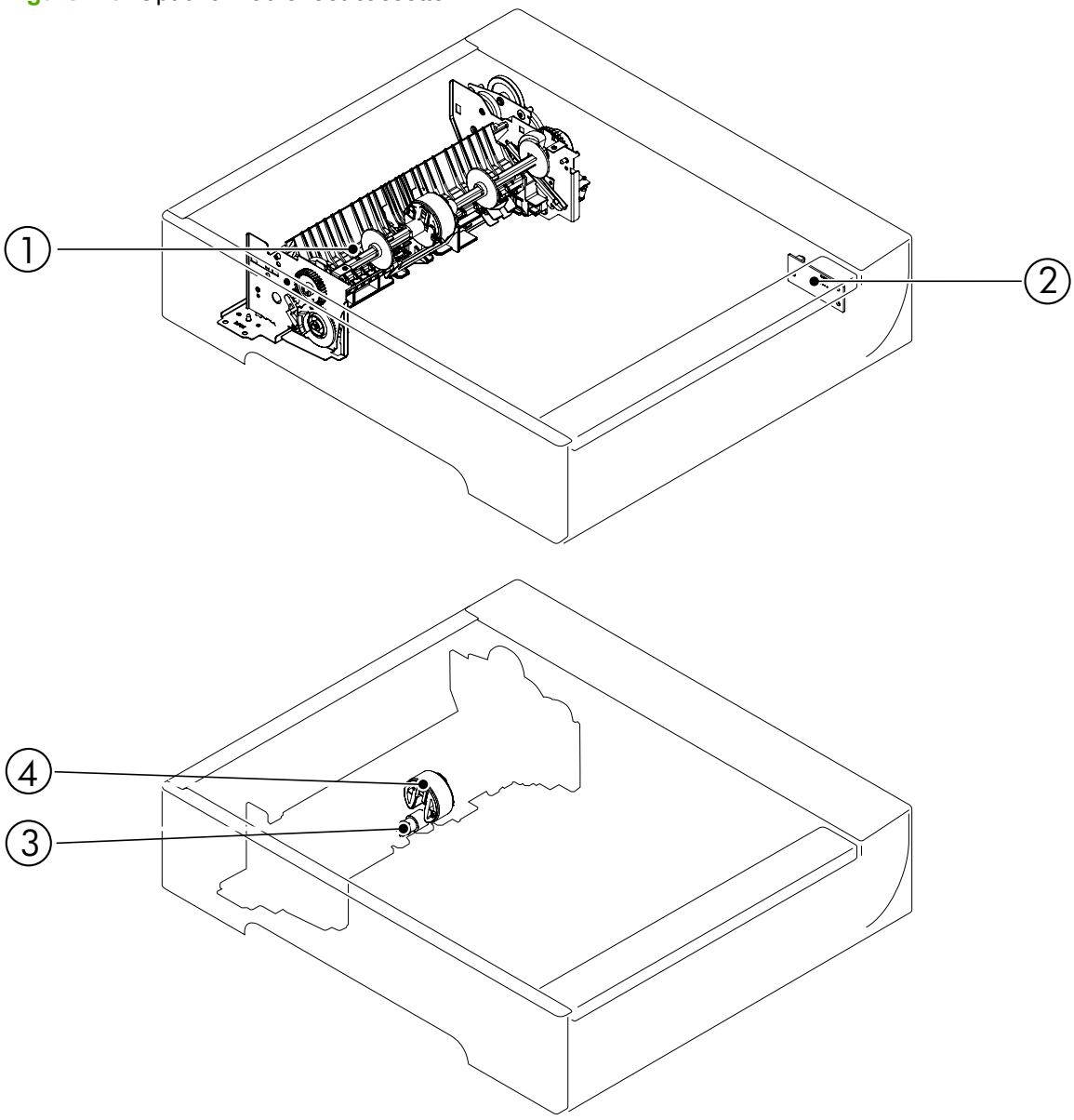

Table 7-8 Optional 250-sheet cassette

Item	Description
1	Paper feeder pickup assembly
2	Paper feeder connector PCA
3	Paper feeder separation roller
4	Paper feeder pickup roller

Interface ports

Figure 7-7 Interface ports

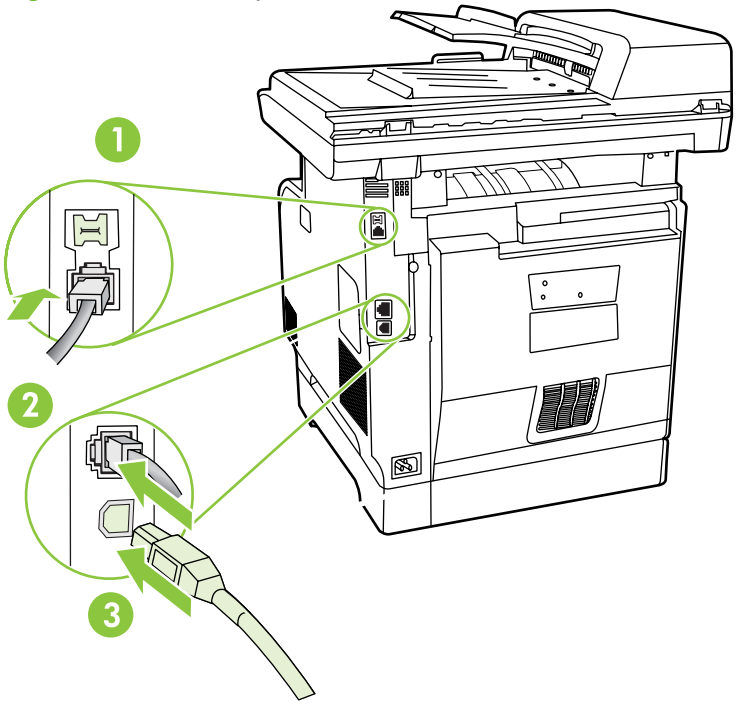

Table 7-9 Interface ports

1	Fax ports (fax/memory-card models only)
2	Network port
3	Hi-Speed USB 2.0 port

DC controller PCA

Figure 7-8 DC controller connectors

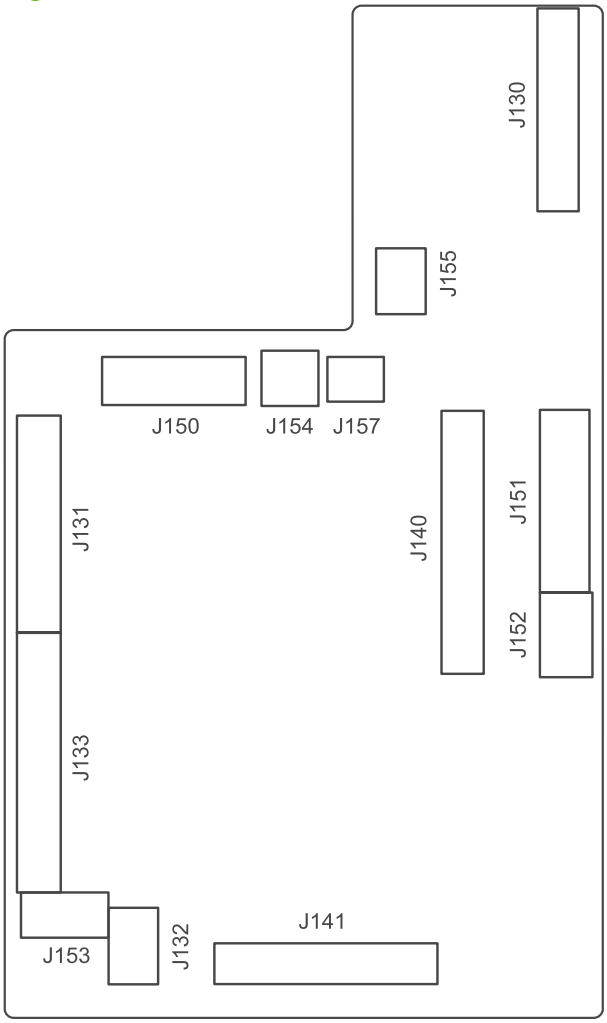

Loose DC controller connections can cause issues. Check the following connections when troubleshooting product problems.

Connector	Board	Product response
J130	DC controller	**Engine Comm. Error** message
J131	DC controller	**51.23 Error** message
J132	DC controller	**51.23 Error** message
J133	DC controller	The graphical display is purple, and then a **Rear door open** message displays
J140	DC controller	**59.F0 Error** message
J141	DC controller	No startup sounds, and then a **Door open** message displays
J150	DC controller	No startup sounds, and then a **50.7 Fuser Error** message displays
J151	DC controller	LCD is very faint, and the product produces no startup sounds
J152	DC controller	No error displays, but duplexing model will not allow duplex copy jobs

Connector	Board	Product response
J153	DC controller	No error displays
J154	DC controller	**59.C0 Error** message
J156	DC controller	Ready status followed by a **50.2 Fuser Error** message
J157	DC controller	Long initialization followed by a **50.8 Fuser Error** message
J1	Formatter	Long initialization, then scanner click cannot find home position while LEDs blink
J2	Formatter	LCD backlit only, but control-panel keys still function
J3	Formatter	LCD blank
J4	Formatter	Long initialization followed by a **Scanner Error 5** message
J6	Formatter	LCD backlighting is purple and LEDs blink
J9	Formatter	**Engine Comm. Error** message
J11	Formatter	No error displays. Memory-card settings do not appear on configuration page.
P1	Formatter	**ADF door is open** message
P2	Formatter	No audio (fax/memory-card models only
P12	Formatter	LCD blank

Timing diagram

Approximate timing in seconds.

Figure 7-9 Timing diagram

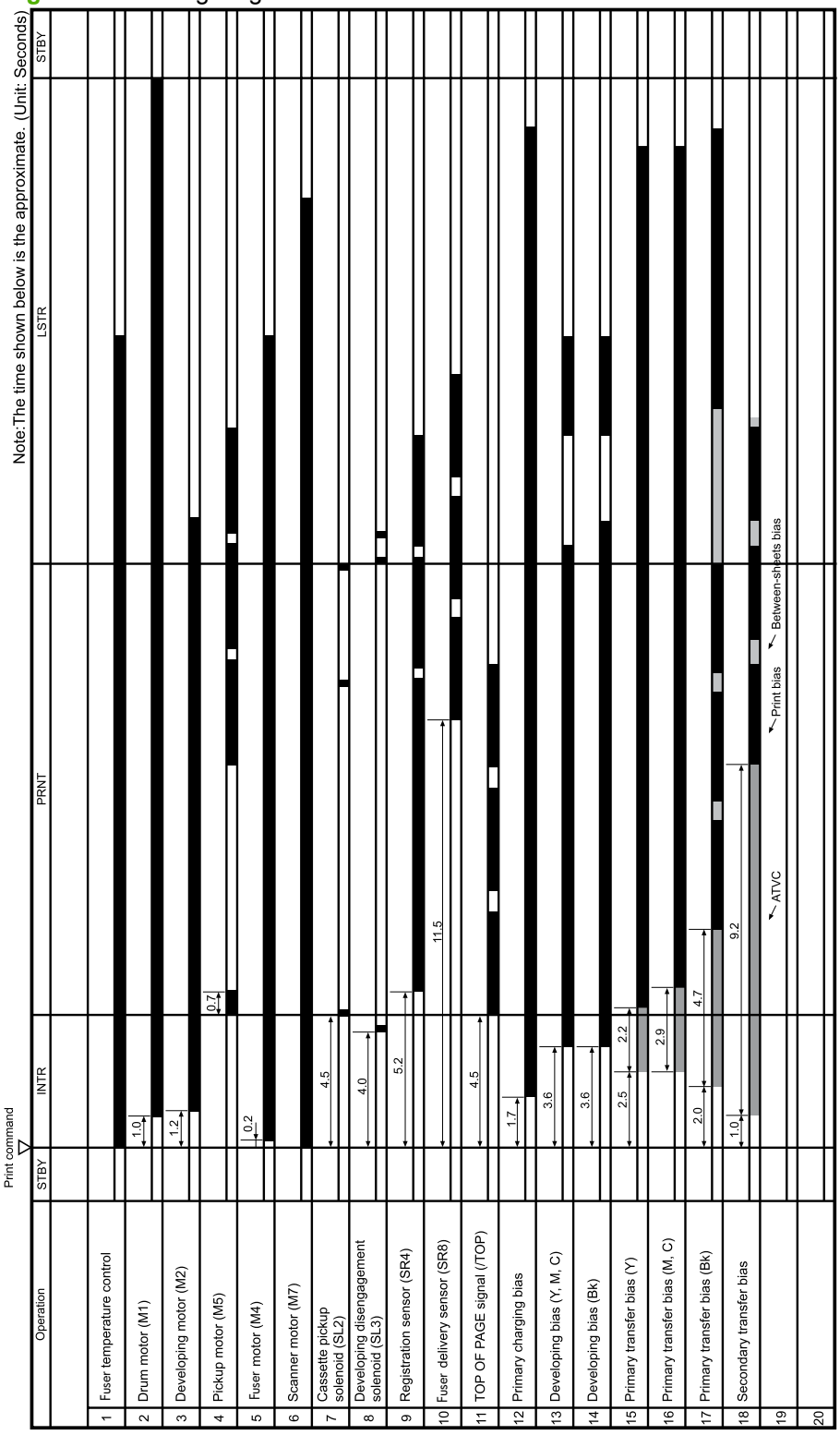

Circuit diagram

Figure 7-10 Circuit diagram

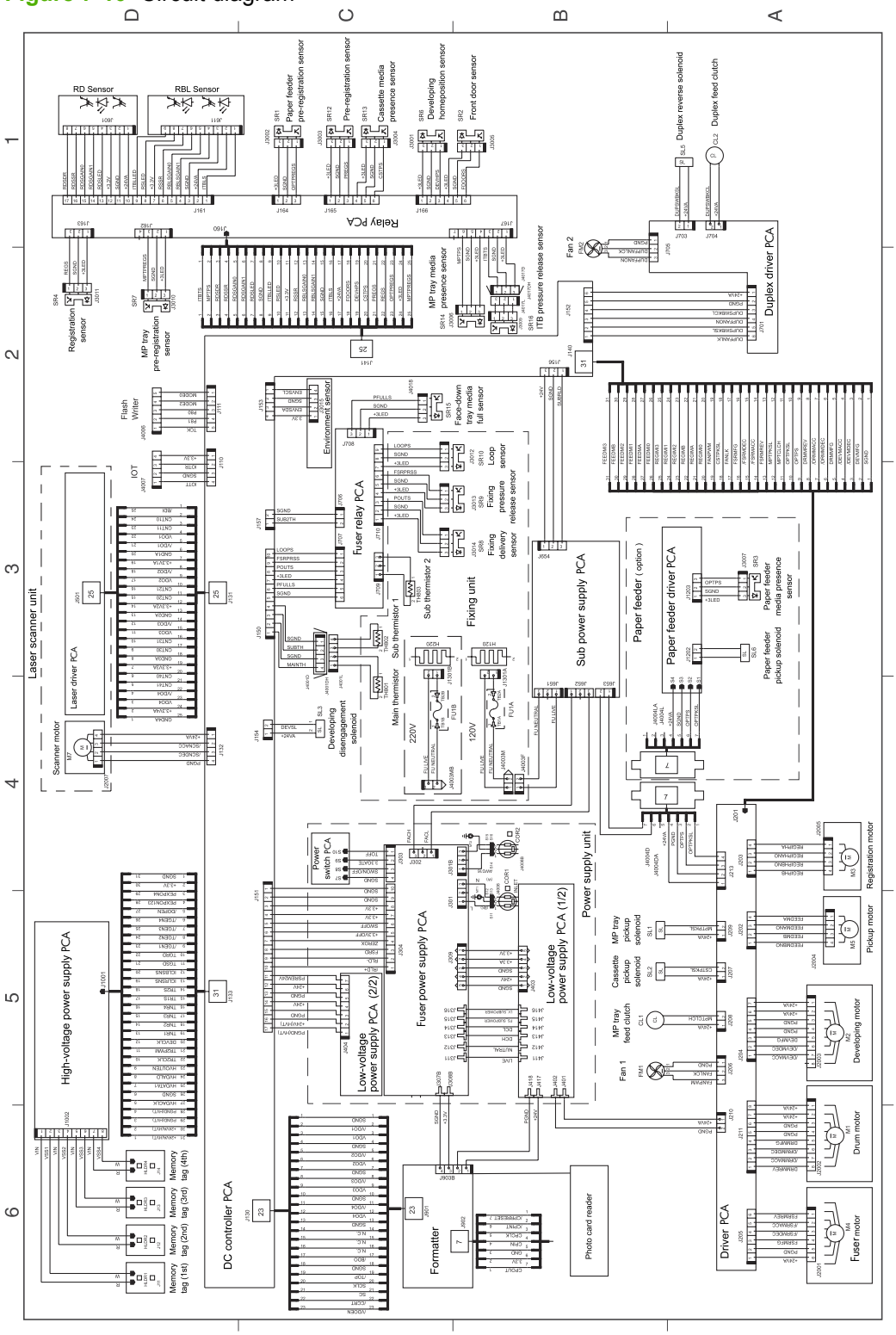

Print-quality troubleshooting tools

Repetitive image defects

If the product output has a consistent, repetitive defect, then use the table in this section to determine which part needs to be replaced based on the measured distance between the repetitions of the defect.

NOTE: The following table replaces the graphical repetitive defect ruler. You can make your own ruler by using these measurements. For the most accurate results, use a metric ruler.

Table 7-10 Repetitive image defects

Distance between identical defects	Component	Notes
22 mm (0.87 in)	Developer roller	Replace the print cartridge.
38 mm (1.5 in)	Primary charging roller	Replace the print cartridge.
44.0 mm (1.73 in)	Registration roller	Clean the roller. If dirt still appears on the page, replace the registration unit.
58 mm (2.3 in)	Fuser sleeve	Process a cleaning page. If dirt still appears on the page, replace the fuser.
58 mm (2.3 in)	Transfer roller	Replace the secondary transfer feed unit.
63 mm (2.5 in)	Pressure roller (one rotation)	Process a cleaning page. If dirt still appears on the page, replace the fuser.
75 mm (2.9 in)	OPC drum	Replace the print cartridge.
78 mm (3 in)	ITB	Calibrate the product. If dirt still appears on the page, replace the ITB unit.

Calibrate the product

Calibration is a product function that optimizes print quality. If you experience any print-quality problems, calibrate the product.

Calibrate the product from the control panel

1. Press Setup.
2. Use the arrow buttons to highlight **System setup**, and then press OK.
3. Use the arrow buttons to highlight **Print quality**, and then press OK.
4. Use the arrow buttons to highlight **Calibrate color**, and then press OK.
5. Use the arrow buttons to highlight **Calibrate now**, and then press OK.

Calibrate the product from HP ToolboxFX

1. Open HP ToolboxFX.
2. Click the **Device Settings** folder, and then click the **Print Quality** page.
3. In the area for Color Calibration, select the **Calibrate Now** check box.
4. Click **Apply** to calibrate the product immediately.

Internal print quality test pages

This section describes the pages and reports that help you diagnose and solve product problems.

Cleaning page

To clean the paper path, process a cleaning page. See Clean the paper path on page 73

Service page

The service page lists information about paper type settings, copy quality settings, and other status settings.

1. Press Setup 🔧.
2. Use the arrow buttons to highlight **Reports**, and then press OK.
3. Use the arrow buttons to highlight **Service page**, and then press OK.

Diagnostics pages

The diagnostics page shows the current color settings and properties of the product. You can use this page to check for color plane registration and color density information.

1. Press Setup 🔧.
2. Use the arrow buttons to highlight **Reports**, and then press OK.
3. Use the arrow buttons to highlight **Diagnostics page**, and then press OK.

On the first page, verify that all four print cartridge colors appear on the page. Also, verify that the 90-degree angles in the corners are single toner colors and that the color plane registration is correct.

Figure 7-11 Diagnostic page 1

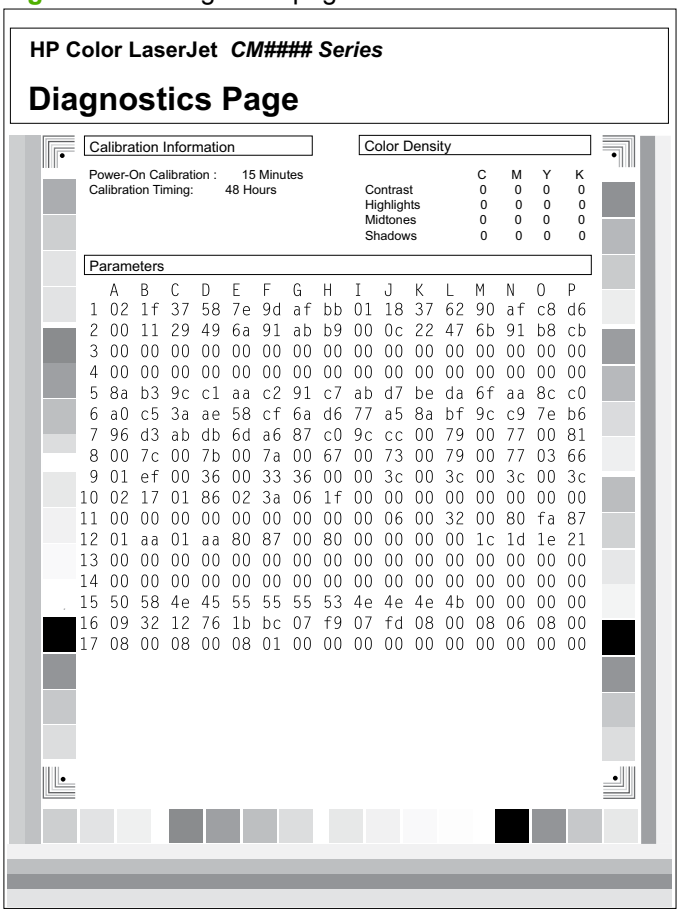

HP Color LaserJet *CM#### Series*

Diagnostics Page

Calibration Information

Power-On Calibration : 15 Minutes
Calibration Timing: 48 Hours

Color Density

	C	M	Y	K
Contrast	0	0	0	0
Highlights	0	0	0	0
Midtones	0	0	0	0
Shadows	0	0	0	0

Parameters

	A	B	C	D	E	F	G	H	I	J	K	L	M	N	O	P
1	02	1f	37	58	7e	9d	af	bb	01	18	37	62	90	af	c8	d6
2	00	11	29	49	6a	91	ab	b9	00	0c	22	47	6b	91	b8	cb
3	00	00	00	00	00	00	00	00	00	00	00	00	00	00	00	00
4	00	00	00	00	00	00	00	00	00	00	00	00	00	00	00	00
5	8a	b3	9c	c1	aa	c2	91	c7	ab	d7	be	da	6f	aa	8c	c0
6	a0	c5	3a	ae	58	cf	6a	d6	77	a5	8a	bf	9c	c9	7e	b6
7	96	d3	ab	db	6d	a6	87	c0	9c	cc	00	79	00	77	00	81
8	00	7c	00	7b	00	7a	00	67	00	73	00	79	00	77	03	66
9	01	ef	00	36	00	33	36	00	00	3c	00	3c	00	3c	00	3c
10	02	17	01	86	02	3a	06	1f	00	00	00	00	00	00	00	00
11	00	00	00	00	00	00	00	00	00	06	00	32	00	80	fa	87
12	01	aa	01	aa	80	87	00	80	00	00	00	00	1c	1d	1e	21
13	00	00	00	00	00	00	00	00	00	00	00	00	00	00	00	00
14	00	00	00	00	00	00	00	00	00	00	00	00	00	00	00	00
15	50	58	4e	45	55	55	55	53	4e	4e	4e	4b	00	00	00	00
16	09	32	12	76	1b	bc	07	f9	07	fd	08	00	08	06	08	00
17	08	00	08	00	08	01	00	00	00	00	00	00	00	00	00	00

On the second page, verify that there are four print-cartridge color sweep bars near the top of the page. From right to left, there should be even steps of toner gradation from light to 100%. The other squares on the page are for use only during manufacturing.

Figure 7-12 Diagnostic page 2

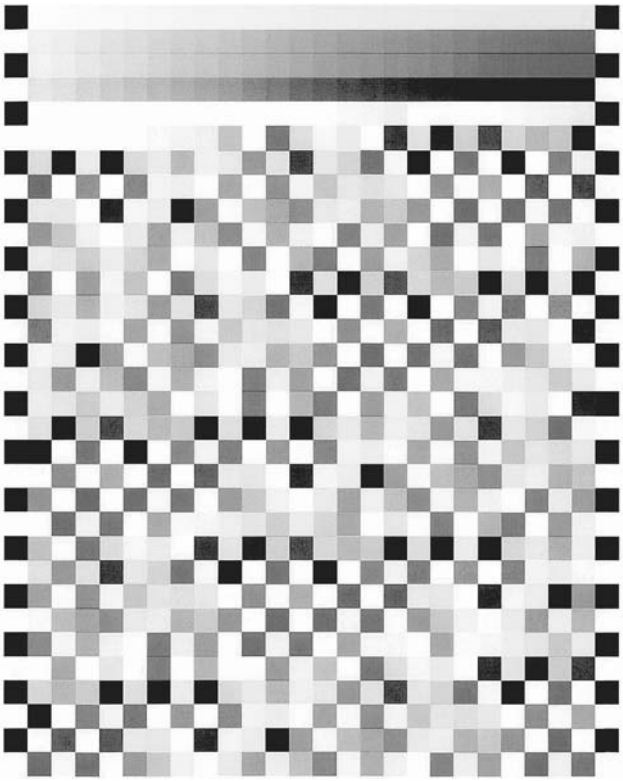

Engine print mode specifications

The media type being used in the product can affect the print speed. The following table provides print-speed specifications for the different media types.

Table 7-11 Engine print mode specifications

Print mode	Print speed[1]
Normal	Full speed
Light media	Full speed
Heavy media 1	Full speed (1/2-speed[2])
Heavy media 2	Full speed (1/2-speed[2])
Heavy media 3	1/2-speed (1/3-speed[2])
Glossy media 1	1/3-speed
Glossy media 2	1/3-speed
Glossy media 3	1/3-speed
Glossy film	1/3-speed
Overhead transparency	1/3-speed
Envelope 1	1/2-speed
Envelope 2	1/3-speed
Label	1/2-speed

Table 7-11 Engine print mode specifications (continued)

Print mode	Print speed[1]
Photo media	1/3-speed

[1] Speeds shown are for monochrome printing.

[2] Speeds in parentheses denote print speed when the environmental temperature is 20° C (68° F) or lower.

HP ToolboxFX software

The HP ToolboxFX is a program that you can use for the following tasks:

- Checking the product status
- Checking the supplies status
- Setting up alerts
- Viewing product documentation
- Gaining access to troubleshooting and maintenance tools

For more information, see View the HP ToolboxFX on page 52.

Control-panel messages

NOTE: Not every product error produces a control-panel message. Some errors display only in the error log. To view the error-log-only messages and possible solutions, see Event-log-only messages on page 279.

Table 7-12 Control-panel messages

Control panel message	Event log error message	Description	Recommended action
10.000X Supply Memory Error		A specific print cartridge has an e-label error. "X" indicates the cartridge. • 0=black • 1=cyan • 2=magenta • 3=yellow	Remove and reinstall the print cartridge. Turn off and then turn on the product. If the problem is not solved, replace the cartridge.
10.100X Supply Memory Error		A specific print cartridge has a faulty or missing e-label. "X" indicates the cartridge. • 0=black • 1=cyan • 2=magenta • 3=yellow	Check the e-label. If it is broken or damaged, replace the cartridge. Verify that the cartridge is installed in the correct location. Reinstall the print cartridge. Turn off and then turn on the product. If the error is with a color cartridge, try swapping it with a different color cartridge in the tray. If the same message appears, then there is an engine problem. If a different 10.100X message appears, replace the cartridge. If the problem is not solved, replace the print-cartridge drawer. If the error persists, replace the DC controller.
49 Error **Turn off then on**		The product has experienced an embedded firmware error. Under most conditions, the product will power cycle automatically.	Turn off the power by using the power switch, wait at least 30 seconds, and then turn on the power and wait for the product to initialize. If the error persists, perform an NVRAM initialization. If the error persists, update the firmware. If the error persists, replace the formatter.

Table 7-12 Control-panel messages (continued)

Control panel message	Event log error message	Description	Recommended action
49 Service Error **Turn off then on**		The product has experienced a firmware error.	1. Turn off the power by using the power switch, and then wait at least 30 seconds. 2. Turn on the power and wait for the product to initialize. If the error persists, perform an NVRAM initialization. If the error persists, update the firmware. If the error persists, replace the formatter.
50.1 Fuser Error **Turn off then on**	50.1000	The product has experienced a low fuser temperature error.	1. Turn off the power by using the power switch, and then wait at least 30 seconds. 2. Turn on the power and wait for the product to initialize. If the error persists, verify that the thermistor connection in the upper left of the fuser area is firmly connected. If the error persists, verify that the J150, J156, and J157 connections on the DC controller are firmly connected. If the error persists, replace the fuser.
50.2 Fuser Error **Turn off then on**	50.2000	The product has experienced a slow fuser error.	1. Turn off the power by using the power switch, and then wait at least 30 seconds. 2. Turn on the power and wait for the product to initialize. If the error persists, verify that the fuser heat roller and pressure roller surfaces are not damaged. If the error persists, verify that the fuser motor rotates freely and that the gears are not damaged. If the error persists, replace the fuser. If the error persists, replace the DC controller.
50.3 Fuser Error **Turn off then on**	50.3000	The product has experienced a general fuser error.	1. Turn off the power by using the power switch, and then wait at least 30 seconds. 2. Turn on the power and wait for the product to initialize.

Table 7-12 Control-panel messages (continued)

Control panel message	Event log error message	Description	Recommended action
			If the error persists, verify that thermistor connection J706 in the upper left of the fuser area is firmly connected. If the error persists, replace the fuser. If the error persists, replace the power supply. If the error persists, replace the DC controller. If the error persists, replace the low-voltage power supply.
50.4 Fuser Error **Turn off then on**	50.4000	The product has experienced a fuser drive circuit error.	1. Turn off the power by using the power switch, and then wait at least 30 seconds. 2. Turn on the power and wait for the product to initialize. If the error persists, verify that the fuser heat roller and pressure roller surfaces are not damaged. If the fuser is damaged, replace the fuser. If the error persists, replace the fuser motor. If the error persists, replace the power supply. If the error persists, replace the DC controller. If the error persists, replace the low-voltage power supply.
50.7 Fuser Error **Turn off then on**	50.7000	The product has experienced a fuser open error.	1. Turn off the power by using the power switch, and then wait at least 30 seconds. 2. Turn on the power and wait for the product to initialize. If the error persists, verify that the J150, J156, and J157 connections on the DC controller are firmly connected. If the error persists, replace the fuser. If the error persists, replace the power supply. If the error persists, replace the DC controller.

Table 7-12 Control-panel messages (continued)

Control panel message	Event log error message	Description	Recommended action
			If the error persists, replace the product.
50.8 Fuser Error **Turn off then on**	50.8000	The product has experienced a low subthermistor fuser error.	1. Turn off the power by using the power switch, and then wait at least 30 seconds. 2. Turn on the power and wait for the product to initialize. If the error persists, verify that the thermistor connection in the upper left of the fuser area is firmly connected. If the error persists, replace the fuser. If the error persists, replace the DC controller.
50.9 Fuser Error **Turn off then on**	50.9000	The product has experienced a high subthermistor fuser error.	1. Turn off the power by using the power switch, and then wait at least 30 seconds. 2. Turn on the power and wait for the product to initialize. If the error persists, verify that the thermistor connection in the upper left of the fuser area is firmly connected. If the error persists, replace the fuser. If the error persists, replace the power supply. If the error persists, replace the DC controller.
51.XX Error **Turn off then on**	51.2000 51.2100 51.2200 51.2300	The product has experienced a laser scanner error. The value for XX indicates the following issues. • XX=20: Black laser scanner error • XX=21: Cyan laser scanner error • XX=22: Magenta laser scanner error • XX=23: Yellow laser scanner error	1. Turn off the power by using the power switch, and then wait at least 30 seconds. 2. Turn on the power and wait for the product to initialize. If the error persists, verify that the J131 and J132 connections on the DC controller are firmly connected. If the error persists, replace the DC controller. If the error persists, replace the product.
52 Scanner Error		The product has experienced an internal hardware error.	Turn off the power by using the power switch, wait at least 30 seconds, and then turn on the

Table 7-12 Control-panel messages (continued)

Control panel message	Event log error message	Description	Recommended action
			power and wait for the product to initialize. If the error persists, replace the DC controller. If the error persists, replace the product.
54.15 Error **Turn off then on**	54.1500	The product has experienced a yellow toner level sensor error.	1. Turn off the power by using the power switch, and then wait at least 30 seconds. 2. Turn on the power and wait for the product to initialize. If the error persists, verify that the cables between the DC controller, print-cartridge tray, and color misregistration sensor are firmly connected. If the error persists, replace the color misregistration sensor. If the error persists, replace the DC controller.
54.16 Error **Turn off then on**	54.1600	The product has experienced a magenta toner level sensor error.	1. Turn off the power by using the power switch, and then wait at least 30 seconds. 2. Turn on the power and wait for the product to initialize. If the error persists, verify that the cables between the DC controller, print-cartridge tray, and color misregistration sensor are firmly connected. If the error persists, replace the color misregistration sensor. If the error persists, replace the DC controller.
54.17 Error **Turn off then on**	54.1700	The product has experienced a cyan toner level sensor error.	If the error persists, verify that the cables between the DC controller, print-cartridge tray, and color misregistration sensor are firmly connected. If the error persists, replace the color misregistration sensor. If the error persists, replace the DC controller.

Table 7-12 Control-panel messages (continued)

Control panel message	Event log error message	Description	Recommended action
54.18 Error **Turn off then on**	54.1800	The product has experienced a black toner level sensor error.	1. Turn off the power by using the power switch, and then wait at least 30 seconds. 2. Turn on the power and wait for the product to initialize. If the error persists, verify that the cables between the DC controller, print-cartridge tray, and color misregistration sensor are firmly connected. If the error persists, replace the color misregistration sensor. If the error persists, replace the DC controller.
54.19 Error **Turn off then on**	54.1900	The product has experienced a top-of-page sensor error.	1. Turn off the power by using the power switch, and then wait at least 30 seconds. 2. Turn on the power and wait for the product to initialize. If the error persists, verify that the DC controller connectors are firmly connected. If the error persists, replace the DC controller.
55.X Error **Turn off then on**	55.0000 55.0601 55.0602 55.1000	The product has experienced a communication timeout error. The value for X indicates the following issues. • X=0: DC controller communication error • X=0601: DC controller NVRAM data error • X=0602: DC controller NVRAM access error • X=1: DC controller memory error	1. Turn off the power by using the power switch, and then wait at least 30 seconds. 2. Turn on the power and wait for the product to initialize. If the error persists, verify that the DC controller connectors are firmly connected. If the error persists, upgrade the firmware. If the error persists, replace the DC controller.
56.01 Error **Turn off then on**	56.0100	The product has experienced an input tray error.	1. Turn off the power by using the power switch, and then wait at least 30 seconds. 2. Reinstall Tray 2 and, if installed, Tray 3. 3. Turn on the power and wait for the product to initialize. If the error persists, verify that the connections between the product and the tray sensor are firmly connected.

Table 7-12 Control-panel messages (continued)

Control panel message	Event log error message	Description	Recommended action
			If the error persists, verify that the tray flag moves correctly. If the error persists, replace the DC controller.
57.XX Error, Turn off then on	57.0100 57.0200	The product has experienced a problem with an internal fan. The value for XX indicates the following issues. • XX=01: Fan 1 (engine fan) error • XX=02: Fan 2 (duplex fan) error	1. Turn off the power by using the power switch, and then wait at least 30 seconds. 2. Turn on the power and wait for the product to initialize. If the error persists, verify that the fan rotates freely. If the error persists, replace the fan. If the error persists, replace the DC controller. If the error persists, replace the low-voltage power supply.
59.3 Error **Turn off then on**	59.3000	The product has experienced a fuser motor startup error.	1. Turn off the power by using the power switch, and then wait at least 30 seconds. 2. Turn on the power and wait for the product to initialize. If the error persists, verify that the DC controller connectors are firmly connected. If the error persists, replace the fuser motor. If the error persists, replace the fuser. If the error persists, replace the sub-controller board. If the error persists, replace the DC controller. If the error persists, replace the low-voltage power assembly.
59.4 Error **Turn off then on**	59.4000	The product has experienced a fuser motor error.	1. Turn off the power by using the power switch, and then wait at least 30 seconds. 2. Turn on the power and wait for the product to initialize. If the error persists, verify that the DC controller connectors are firmly connected. If the error persists, replace the fuser motor.

Table 7-12 Control-panel messages (continued)

Control panel message	Event log error message	Description	Recommended action
			If the error persists, replace the fuser. If the error persists, replace the sub-controller board. If the error persists, replace the DC controller. If the error persists, replace the product.
59.50 Error **Turn off then on**	59.5000	The product has experienced a black image drum motor startup error.	1. Turn off the power by using the power switch, and then wait at least 30 seconds. 2. Turn on the power and wait for the product to initialize. If the error persists, replace the image drum motor. If the error persists, replace the DC controller.
59.53 Error **Turn off then on**	59.5300	The product has experienced a yellow-magenta-cyan image drum motor startup error.	1. Turn off the power by using the power switch, and then wait at least 30 seconds. 2. Turn on the power and wait for the product to initialize. If the error persists, replace the image drum motor. If the error persists, replace the DC controller.
59.60 Error **Turn off then on**	59.6000	The product has experienced a black image drum motor rotation error.	1. Turn off the power by using the power switch, and then wait at least 30 seconds. 2. Turn on the power and wait for the product to initialize. If the error persists, replace the image drum motor. If the error persists, replace the DC controller.
59.63 Error **Turn off then on**	59.6300	The product has experienced a yellow-magenta-cyan image drum motor rotation error.	1. Turn off the power by using the power switch, and then wait at least 30 seconds. 2. Turn on the power and wait for the product to initialize. If the error persists, replace the image drum motor. If the error persists, replace the DC controller.

Table 7-12 Control-panel messages (continued)

Control panel message	Event log error message	Description	Recommended action
59.70 Error **Turn off then on**	59.7000	The product has experienced a black developer motor startup error.	1. Turn off the power by using the power switch, and then wait at least 30 seconds. 2. Turn on the power and wait for the product to initialize. If the error persists, replace the developer motor. If the error persists, replace the DC controller.
59.73 Error **Turn off then on**	59.7300	The product has experienced a yellow-magenta-cyan developer motor startup error.	1. Turn off the power by using the power switch, and then wait at least 30 seconds. 2. Turn on the power and wait for the product to initialize. If the error persists, replace the developer motor. If the error persists, replace the DC controller.
59.80 Error **Turn off then on**	59.8000	The product has experienced a black developer motor rotation error.	1. Turn off the power by using the power switch, and then wait at least 30 seconds. 2. Turn on the power and wait for the product to initialize. If the error persists, replace the developer motor. If the error persists, replace the DC controller.
59.83 Error **Turn off then on**	59.8300	The product has experienced a yellow-magenta-cyan developer motor rotation error.	1. Turn off the power by using the power switch, and then wait at least 30 seconds. 2. Turn on the power and wait for the product to initialize. If the error persists, replace the developer motor. If the error persists, replace the DC controller.
59.9 Error **Turn off then on**	59.9000	The product has experienced an ITB motor startup error.	1. Turn off the power by using the power switch, and then wait at least 30 seconds. 2. Turn on the power and wait for the product to initialize. If the error persists, replace the ITB. If the error persists, replace the drum motor.

Table 7-12 Control-panel messages (continued)

Control panel message	Event log error message	Description	Recommended action
			If the error persists, replace the DC controller.
59.A0 Error **Turn off then on**	59.0160	The product has experienced an ITB motor or main motor rotation error.	1. Turn off the power by using the power switch, and then wait at least 30 seconds. 2. Turn on the power and wait for the product to initialize. If the error persists, replace the ITB. If the error persists, replace the drum motor. If the error persists, replace the DC controller.
59.C0 Error **Turn off then on**	59.0192	The product has experienced a developer motor error.	1. Turn off the power by using the power switch, and then wait at least 30 seconds. 2. Turn on the power and wait for the product to initialize. If the error persists, replace the developer motor. If the error persists, replace the DC controller.
59.F0 Error **Turn off then on**	59.0240	The product has experienced a transfer alienation error.	1. Turn off the power by using the power switch, and then wait at least 30 seconds. 2. Turn on the power and wait for the product to initialize. If the error persists, verify that the DC controller connectors are firmly connected. If the error persists after a print-cartridge replacement, examine the cartridge, and then replace it if necessary. If the error persists, replace the DC controller. If the error persists, replace the cartridge tray.
79 Error **Turn off then on**		The product has experienced an internal firmware error. Under most conditions, the product will power cycle automatically.	Turn off the power by using the power switch, wait at least 30 seconds, and then turn on the power and wait for the product to initialize. If the error persists, perform an NVRAM initialization. If the error persists, update the firmware.

Table 7-12 Control-panel messages (continued)

Control panel message	Event log error message	Description	Recommended action
			If the error persists, replace the formatter.
79 Service Error **Turn off then on**		The product has experienced a firmware error.	1. Turn off the power by using the power switch, and then wait at least 30 seconds. 2. Turn on the power and wait for the product to initialize. If the error persists, update or reload the firmware. See Firmware updates on page 79.
ADF door is open (fax/memory-card models only)		The ADF lid is open or a sensor is malfunctioning.	Make sure that the ADF lid is closed. Remove the ADF and reinstall it. If the message persists, turn off the power by using the power switch, wait at least 30 seconds, and then turn on the power and wait for the product to initialize. If the error persists, replace the ADF assembly.
Comm. error (fax/memory-card models only)		A fax communication error occurred between the product and the sender or receiver.	Allow the product to retry sending the fax. If the error persists, perform a fax test to verify that the phone line works and is plugged into the correct port (see Perform a fax test on page 316). See Solve fax problems (fax/memory-card models only) on page 314.
Comm. error [Receiver CSID] (fax/memory-card models only)		A fax communication error occurred between the product and the receiver.	Allow the product to retry sending the fax. Unplug the product telephone cord from the wall, plug in a telephone, and try making a call. Plug the product phone cord into a jack for another phone line. Try a different phone cord. If the error persists, perform a fax test to verify that the phone line works and is plugged into the correct port (see Perform a fax test on page 316).
Comm. error [Sender CSID] (fax/memory-card models only)		A fax communication error occurred between the product and the sender.	Allow the product to retry sending the fax. Unplug the product telephone cord from the wall, plug in a telephone, and try making a call. Plug the product phone cord into a jack for another phone line.

Table 7-12 Control-panel messages (continued)

Control panel message	Event log error message	Description	Recommended action
			Try a different phone cord. Try sending to a different receiver. If the error persists, perform a fax test to verify that the phone line works and is plugged into the correct port (see Perform a fax test on page 316). If the error persists, replace the fax card (data access arrangement (DAA)).
Device error, press OK		The product has experienced a generic engine error.	This is a warning message only. Job output might be affected. If the error persists, perform an NVRAM initialization. If the error persists, update the firmware. If the error persists, replace the product.
Device is busy. Try again later		The product is currently in use.	Wait for the product to finish the current job.
Doc feeder jam		The ADF has not been cleared since previous jam.	Clear the jam. If jams continue, replace the ADF.
Doc feeder jam Clear, Reload		A piece of media is jammed in the ADF tray.	Open the document release door, clear the jam, close the document release door, and reload the paper into the ADF tray. If the error persists, replace the ADF pickup roller assembly.
Document feeder mispick. Reload		Media in the ADF tray was not picked up.	Remove the media from the ADF tray, and then reload it. Clean the ADF pickup roller. See Clean the automatic document feeder (ADF) pickup roller assembly on page 74. If the error persists, replace the ADF pickup roller assembly. If the error persists, replace the ADF.
Door open		The print-cartridge door is open.	Close the print-cartridge door. If the error persists, replace the print-cartridge drawer. If the error persists, replace the DC controller.

Table 7-12 Control-panel messages (continued)

Control panel message	Event log error message	Description	Recommended action
Engine Comm. Error		The product has experienced an engine communication timeout error.	Turn off the power by using the power switch, wait at least 30 seconds, and then turn on the power and wait for the product to initialize. If a surge protector is being used, remove it. Plug the product directly into the wall socket. Use the power switch to turn the product on. If the error persists, verify that the connector in DC controller connector J130 is firmly seated.
Engine error, press OK	41.2000	The product experienced a print engine error.	This is a warning message only. Job output might be affected. If the error persists, verify that connections J131 and J132 on the DC controller are firmly connected. If the error persists, replace the DC controller. If the error still persists, replace the product.
FATAL ERROR X! CALL HP SUPPORT		An attempted firmware upgrade has failed.	1. Re-download the firmware update package from www.hp.com/support/CM2320series. 2. Install the new firmware update package. See Firmware updates on page 79. If the error persists, replace the formatter.
Fax delayed – Send memory full (fax/memory-card models only)		Fax memory is full.	Cancel the fax by pressing OK or Cancel ✖. Resend the fax. You might need to send the fax in multiple sections if the error occurs again.
Fax is busy Canceled send (fax/memory-card models only)		The fax line to which you were sending a fax was busy. The product has canceled sending the fax.	Check that you are dialing the correct fax number. Check that the **Redial if busy** option is enabled. Perform a fax test to verify that the phone line works and is plugged into the correct port (see Perform a fax test on page 316).
Fax is busy Redial pending (fax/memory-card models only)		The fax line to which you were sending a fax was busy. The product automatically redials the	Check that you are dialing the correct fax number.

Table 7-12 Control-panel messages (continued)

Control panel message	Event log error message	Description	Recommended action
		busy number. See the user guide.	Perform a fax test to verify that the phone line works and is plugged into the correct port (see Perform a fax test on page 316).
Fax memory full Canceling recv. (fax/memory-card models only)		During the fax transmission, the product ran out of memory. Only the pages that fit into memory will be printed.	Print all of the faxes, and then have the sender resend the fax. Have the sender divide the fax job into multiple jobs before resending. Cancel all fax jobs or, in the **Service** menu **Fax Service** submenu, clear the faxes from memory. If the error persists, perform an NVRAM initialization. If the error persists, update the firmware. If the error persists, replace the formatter.
Fax memory full Canceling send (fax/memory-card models only)		During the fax job, the memory filled. All pages of the fax have to be in memory for a fax job to work correctly. Only the pages that fit into memory were sent.	Print all received faxes or wait until all pending faxes are sent. Cancel all fax jobs or, in the **Service** menu **Fax Service** submenu, clear the faxes from memory. If the error persists, perform an NVRAM initialization. If the error persists, update the firmware. If the error persists, replace the formatter.
Fax recv. error		An error occurred while trying to receive a fax.	Perform a fax test to verify that the phone line works and is plugged into the correct port (see Perform a fax test on page 316). Send the fax to a device known to be working correctly. Receive a fax from a device known to be working correctly. See Solve fax problems (fax/memory-card models only) on page 314. If the error persists, replace the fax card (data access arrangement (DAA)).
Fax Send error (fax/memory-card models only)		An error occurred while trying to send a fax.	Perform a fax test to verify that the phone line works and is

Table 7-12 Control-panel messages (continued)

Control panel message	Event log error message	Description	Recommended action
			plugged into the correct port (see Perform a fax test on page 316). Send the fax to a device known to be working correctly. Receive a fax from a device known to be working correctly. See Solve fax problems (fax/memory-card models only) on page 314. If the error persists, replace the fax card (data access arrangement (DAA)).
Fax storage is full. Unable to answer call (fax/memory-card models only)		Memory is full	Print out the private receive faxes or delayed faxes. Clear the product memory.
Fit to Page on flatbed only		The copy reduce/enlarge feature (called "Fit to Page") applies only to copies made from the flatbed scanner.	Use the flatbed or select another reduction/enlargement setting.
Install <Color> Cartridge		One of the color cartridges is not installed with the door closed.	Install or reinstall the indicated color cartridge. If the error persists, replace the print-cartridge drawer.
Invalid driver Press OK		You are using the incorrect printer driver.	Select the printer driver that is appropriate for the product.
Invalid entry		Invalid data or response.	Correct the entry.
Jam in (area), Open door and clear jam	13.0000	There is a paper jam in the print paper path or output bin.	Clear the jam from the area indicated on the product control panel, and then follow the control panel instructions. See Clear jams on page 283. Remove any debris from the paper path. Clean the paper sensors. Verify the pickup roller, separation roller, and fuser are working correctly. If necessary, replace the rollers.
Jam in Tray #, Clear jam and then press OK	13.0000	The product has detected a jam in one of the following areas: Tray 1, Tray 2, or Tray 3.	Clear the jam from the area indicated on the product control panel, and then follow the control panel instructions. See Clear jams on page 283.
Jam in Tray 1, Clear jam and then press OK	13.0000	The product has detected a jam in Tray 1.	Clear the jam from Tray 1, and then follow the control panel instructions. See Clear jams on page 283.

Table 7-12 Control-panel messages (continued)

Control panel message	Event log error message	Description	Recommended action
			Verify the pickup roller and separation roller are working correctly. If necessary, replace the rollers. If the error persists, replace the product.
Load Paper <Type>		Out of paper in all available trays.	If paper is already loaded in the tray, test the paper sensors. Verify that all DC controller connectors are firmly connected.
Load Tray 1 <TYPE> <SIZE>, Press OK to use available media		The product is processing a job, but no trays match.	Load paper in the correct orientation. Press OK to use existing tray settings.
Load Tray 1, <PLAIN> <SIZE> / Cleaning mode, OK to start		This is the product cleaning mode paper prompt.	Load a clean sheet of paper in the correct orientation, then press OK to begin the cleaning procedures.
Load Tray X <TYPE> <SIZE>, Press OK to use available media		The product is processing a job, but a matching tray is empty.	Press OK to use existing available media.
Manual Duplex Load Tray 1, Press OK		The product is set to the manual duplex mode.	Load paper in the correct orientation.
Manual feed <SIZE> <TYPE>, Press OK to use available media		The product is in manual feed mode.	Load paper into the indicated tray.
Memory is low Try again later		The product does not have enough memory to start a new job.	Turn the product off and then on to clear the memory. If the error persists, perform an NVRAM initialization. If the error persists, update the firmware.
Memory is low. Press OK		The product memory has been almost completely filled.	Press Cancel to clear the error. Break the job into smaller jobs that contain fewer pages. Turn the product off and then on to clear the memory.
Memory low Only 1 copy made. Press OK to continue.		The product does not have enough memory to complete the collated copy job.	Break the job into smaller jobs that contain fewer pages. Turn the product off and then on to clear the memory.
Misprint, Press OK		Feed delay misprint.	Verify that paper is loaded in the input tray. Reload the paper.

Table 7-12 Control-panel messages (continued)

Control panel message	Event log error message	Description	Recommended action
No Dial Tone (fax/memory-card models only)		The product could not detect a dial tone.	Check for a dial tone on the phone line by pressing Start Fax. Perform a fax test to verify that the phone line works and is plugged into the correct port (see Perform a fax test on page 316). If the error persists, replace the fax card (data access arrangement (DAA)).
No document sent (fax/memory-card models only)		The product did not scan any pages, or it did not receive any pages from the computer to transmit a fax.	Perform a fax test to verify that the phone line works and is plugged into the correct port (see Perform a fax test on page 316). Check the fax log for errors. Print a T.30 trace report, and then check it for errors. If the error persists, perform an NVRAM initialization. If the error persists, replace the fax card (data access arrangement (DAA)).
No fax answer Redial pending (fax/memory-card models only)		The receiving fax line did not answer. The product attempts to redial after a few minutes.	Allow the product to retry sending the fax. Perform a fax test to verify that the phone line works and is plugged into the correct port (see Perform a fax test on page 316). If the error persists, perform an NVRAM initialization. If the error persists, update the firmware.
No fax answer. Canceled send (fax/memory-card models only)		Attempts to redial a fax number failed, or the “Redial-no answer” option was turned off.	Check that the redial option is enabled. Perform a fax test to verify that the phone line works and is plugged into the correct port (see Perform a fax test on page 316). Check the fax log for errors. Print a T.30 trace report, and then check it for errors. If the error persists, update the firmware. If the error persists, perform an NVRAM initialization. If the error persists, use the **Service** menu **Restore defaults** function to reset the product.

Table 7-12 Control-panel messages (continued)

Control panel message	Event log error message	Description	Recommended action
			If the error persists, replace the fax card (data access arrangement (DAA)).
No fax detected (fax/memory-card models only)		The product answered the incoming call but did not detect that a fax machine was calling.	Allow the product to retry receiving the fax. Perform a fax test to verify that the phone line works and is plugged into the correct port (see Perform a fax test on page 316). Check the fax log for errors. Print a T.30 trace report, and then check it for errors. If the error persists, update the firmware. If the error persists, use the **Service** menu **Restore defaults** function to reset the product. If the error persists, replace the fax card (data access arrangement (DAA)).
Non-HP supply Installed		A new supply has been installed that is not made by HP. This message is appears for several seconds, and then the product returns to the **Ready** state.	Install a genuine HP print cartridge. If the error persists, verify that all DC controller connectors are firmly connected. If the error persists, replace the print-cartridge drawer.
Order <Color> Cartridge		A color print cartridge is low.	Order the indicated color print cartridge.
Print failure, press OK. If error repeats, turn off then on.	21.0000	The product could not print the current page because of its complexity.	1. Press OK to clear the message. 2. Turn off the power by using the power switch, and then wait at least 30 seconds. 3. Turn on the power and wait for the product to initialize. If the error persists, break the job into smaller units, and then resend them. If the error persists, verify that the correct print driver is being used. If the error persists, update the firmware. **NOTE:** For memory-card models, adding memory to the DIMM slot might help solve this problem.

Table 7-12 Control-panel messages (continued)

Control panel message	Event log error message	Description	Recommended action
Resend upgrade		An attempted firmware upgrade has failed.	1. Re-download the firmware update package from www.hp.com/support/CM2320series. 2. Install the new firmware update package. See Firmware updates on page 79. If the error persists, replace the DC controller.
Scanner error #, Turn off then on		The product has experienced an error in the scanner sub-assembly area.	Turn off the power by using the power switch, wait at least 30 seconds, and then turn on the power and wait for the product to initialize. If the error persists, verify that all formatter connectors are firmly connected. If the error persists, replace the scanner assembly. If the error persists, replace the formatter.
Scanner reserved for PC scan		A computer is using the product to create a scan.	Wait until the computer scan has finished, or cancel the scan from the computer software, or press Cancel.
Scanning error Cannot connect		The product cannot transmit scan information to a computer.	If this is a persistent error, turn the product off, and then turn it on. Also, turn the computer off, and then turn it on. Verify that the connection cable is not loose or damaged. Replace the cable if necessary, and try the scan again. Verify that the computer prints in order to confirm a working USB or network connection. Verify that the scan-to destination folder or software program path is correct. Remove and then reinstall the software program. If the error persists, replace the formatter.
Settings cleared		The product has cleared job settings.	Re-enter any appropriate job settings.

Table 7-12 Control-panel messages (continued)

Control panel message	Event log error message	Description	Recommended action
Unexpected size in tray X **Load <size> press OK**	41.3000	The product has experienced a media-size mismatch in the tray indicated.	• Verify that the default product settings for the tray are correct. • Print a configuration page, and then verify that the tray settings are correct. • Restore the tray **Paper Type** setting to **Any type** and the **Paper Size** setting to **Any size**, and then resend the print job.
Used [color] installed, to accept press OK		A used color printer cartridge has been installed or moved.	Press OK to return to the Ready state.

Event-log messages

Print the event log

1. Open the secondary service menu. See Open the secondary service menu on page 311.
2. Use the arrow buttons to select **Service Reports**, and then press OK.
3. Use the arrow buttons to select **Error Report**, and then press OK.

NOTE: You can use HP ToolboxFX to view the event log from a computer. See Event log on page 53.

Event log messages

The following table contains all event log codes for this product. Many event log codes correspond to a control-panel error message. For information about solving control-panel error messages, see Control-panel messages on page 257. For information about solving errors that display only in the event log, see Event-log-only messages on page 279.

Table 7-13 Event-log messages

Event code	Description
13.0000	Paper jam
20.0000	Memory out
21.0000	Page misfeed or mispick
41.2000	Beam detect malfunction
41.3000	Unexpected size
50.1000	Low fuser temperature error
50.2000	Slow fuser error
50.3000	High fuser temperature error
50.4000	Fuser drive circuit error
50.7000	Fuser open error
50.8000	Low sub-thermistor fuser error
50.9000	High sub-thermistor fuser error
51.2000	Black scanner laser error (inline devices only)
51.2100	Cyan scanner laser error (inline devices only)
51.2200	Magenta scanner laser error (inline devices only)
51.2300	Yellow scanner laser error (inline devices only)
54.0100	Environmental sensor error
54.0600	Density sensor error
54.1100	Black density out of range
54.1101	Cyan density out of range
54.1102	Magenta density out of range

Table 7-13 Event-log messages (continued)

Event code	Description
54.1103	Yellow density out of range
54.1200	Black density measurement abnormality
54.1201	Cyan density measurement abnormality
54.1202	Magenta density measurement abnormality
54.1203	Yellow density measurement abnormality
54.1400	Color plane registration sensor error (inline devices only)
54.1599	Black CPR pattern cannot be read
54.1501	Cyan CPR pattern cannot be read
54.1502	Magenta CPR pattern cannot be read
54.1503	Yellow CPR pattern cannot be read
54.1500	Yellow toner level sensor error
54.1600	Magenta toner level sensor error
54.1700	Cyan toner level sensor error
54.1800	Black toner level sensor error
54.1900	Bad top-of-page (TOP) sensor
54.2100	Beam detect (BD) error
54.2500	Top-of-page sensor error
55.0000	Engine internal communication error
55.0601	DC controller NVRAM data error
55.0602	DC controller NVRAM access error
55.1000	DC controller memory error
57.0100	Fan motor error
57.0200	Fan error
59.0160	ITB or main motor rotation error (59.A0)
59.0192	Developer motor rotation error (59.C0)
59.0240	Transfer alienation failure (59.F0)
59.3000	Fuser motor startup error
59.4000	Fuser motor error
59.5000	Image drum motor startup error—black
59.5300	Image drum motor startup error—yellow
59.6000	Image drum motor rotation error—black
59.6300	Image drum motor rotation error—yellow
59.7000	Black developer motor startup error
59.7300	Yellow developer motor startup error

Table 7-13 Event-log messages (continued)

Event code	Description
59.8000	Black developer motor rotation error
59.8300	Yellow developer motor rotation error
59.9000	ITB motor start error

Event-log-only messages

The following product events do not produce a message that appears on the control panel. Instead, they are recorded in the event log.

NOTE: The following solutions are suggested for very persistent error-log entries.

Table 7-14 Event-log-only messages

Event code	Description	Solution
20.0000	Memory out	1. Turn off the power by using the power switch, and then wait at least 30 seconds. 2. Turn on the power and wait for the product to initialize. If the error persists, break the job into smaller jobs that contain fewer pages. If the error persists, update the firmware. **NOTE:** For memory-card models, adding memory to the DIMM slot might help solve this problem.
54.0100	Environmental sensor error	Verify that the DC controller connectors are firmly connected. If the error persists, replace the temperature/humidity sensor. If the error persists, replace the DC controller.
54.0600	Density sensor error	Verify that the cables between the DC controller and the ITB are firmly connected. If the error persists, replace the color misregistration sensor. If the error persists, replace the ITB. If the error persists, replace the DC controller.
54.1100	Black density out of range	
54.1101	Cyan density out of range	
54.1102	Magenta density out of range	
54.1103	Yellow density out of range	
54.1200	Black density measurement abnormality	
54.1201	Cyan density measurement abnormality	
54.1202	Magenta density measurement abnormality	
54.1203	Yellow density measurement abnormality	

Table 7-14 Event-log-only messages (continued)

Event code	Description	Solution
54.1400	Color plane registration sensor error (inline devices only)	1. Turn off the power by using the power switch, and then wait at least 30 seconds. 2. Turn on the power and wait for the product to initialize. If the error persists, verify that the cables between the color misregistration sensor and the DC controller are firmly connected. If the error persists, replace the color misregistration sensor. If the error persists, replace the ITB. If the error persists, replace the print cartridge tray. If the error persists, replace the DC controller.
54.1501	Cyan CPR pattern cannot be read	
54.1502	Magenta CPR pattern cannot be read	
54.1503	Yellow CPR pattern cannot be read	
54.1599	Black CPR pattern cannot be read	
54.2100	Beam detect (BD) error	If the error persists, replace the DC controller. If the error persists, replace the product.
54.2500	Top-of-page sensor error	Verify that the DC controller connectors are firmly connected. If the error persists, replace the DC controller.

Paper-handling problems

Jams

Recover jams

When the jam recovery feature is turned on, the product reprints any pages that are damaged during a jam. To turn on jam recovery, you must use the embedded Web server (EWS) or HP ToolboxFX.

Use the EWS to set jam recovery (network models only)

1. At a networked computer, open the EWS.
2. Click the **System** tab.
3. Click **System Setup**.
4. In the **Jam Recovery** drop-down list, select **On**.
5. Click **Apply**.

Use HP ToolboxFX to set jam recovery

1. Open HP ToolboxFX.
2. Click the **Device Settings** folder, and then click **System Setup**.
3. Next to **Jam Recovery**, select **On** from the drop-down list.

Common causes of jams

Common causes of jams[1]

Cause	Solution
The paper length and width guides are not adjusted correctly.	Adjust the guides so they are against the paper stack.
The media does not meet specifications.	Use only media that meets HP specifications. See Paper and print media on page 37.
You are using media that has already passed through a printer or copier.	Do not use media that has been previously printed on or copied.
An input tray is loaded incorrectly.	Remove any excess media from the input tray. Make sure that the stack is below the maximum stack height mark in the tray. See Load paper and print media on page 43.
The media is skewed.	The input-tray guides are not adjusted correctly. Adjust them so they hold the stack firmly in place without bending it.
The media is binding or sticking together.	Remove the media, flex it, rotate it 180 degrees, or flip it over. Reload the media into the input tray. **NOTE:** Do not fan paper. Fanning can create static electricity, which can cause paper to stick together.
The media is removed before it settles into the output bin.	Wait until the page completely settles in the output bin before removing it.
The media is in poor condition.	Replace the media.
The internal rollers from the tray are not picking up the media.	Remove the top sheet of media. If the media is heavier than 163 g/m^2 (43 lb), it might not be picked from the tray.
The media has rough or jagged edges.	Replace the media.
The media is perforated or embossed.	Perforated or embossed media does not separate easily. Load sheets one at a time.
Paper was not stored correctly.	Replace the paper in the trays. Paper should be stored in the original packaging in a controlled environment.

[1] If the product continues to jam, contact HP Customer Support or your authorized HP service provider.

Clear jams

Causes of jams

Occasionally, paper or other print media can become jammed during a print job. Some causes include the following events:

- The input trays are loaded improperly or overfilled, or the media guides are not set properly.
- Media is added to or removed from an input tray during a print job or an input tray is removed from the product during a print job.
- The cartridge door is opened during a print job.
- Too many sheets have accumulated in an output area, or sheets are blocking an output area.
- The print media that is being used does not meet HP specifications. See Paper and print media on page 37.
- The media is damaged or has foreign objects attached to it, such as staples or paper clips.
- The environment in which the print media was stored is too humid or too dry. See Paper and print media on page 37.

Where to look for jams

Jams can occur in these locations:

- In the automatic document feeder (ADF)
- In input areas
- In the automatic duplexer (where applicable)
- In output areas
- Inside the product (paper path)

Find and remove the jam by using the instructions on the following pages. If the location of the jam is not obvious, first look inside the product.

Loose toner might remain in the product after a jam. This problem typically resolves itself after a few sheets have been printed.

Clear jams in Tray 1

NOTE: If the sheet tears, make sure that all of the fragments are removed before you resume printing.

Pull the jammed sheet from Tray 1.

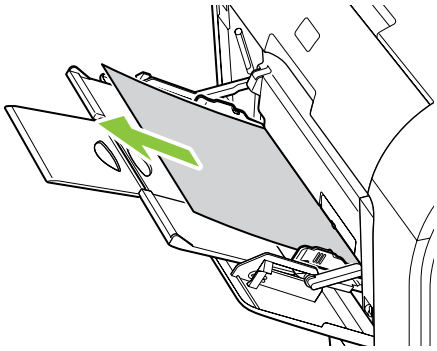

If paper has entered far enough into Tray 1, remove Tray 2, drop the Tray 1 plate down, and then remove the paper from the opening.

Clear jams in Tray 2

1. Pull out Tray 2 and place it on a flat surface.

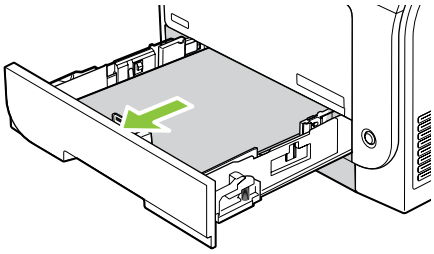

2. Lower the jam-access tray.

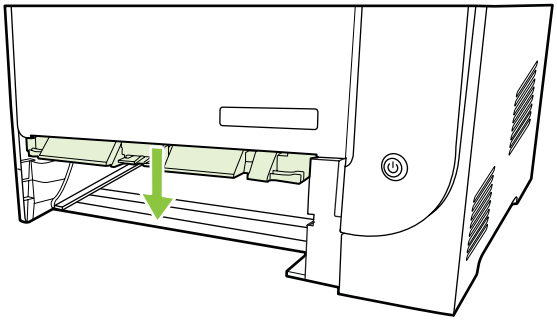

3. Remove the jammed sheet by pulling it straight out.

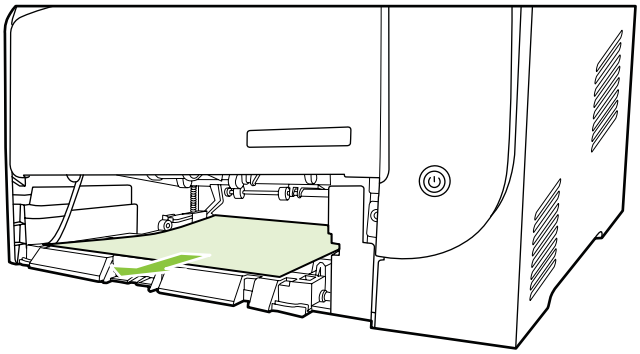

4. Close the jam-access tray.

5. Replace Tray 2.

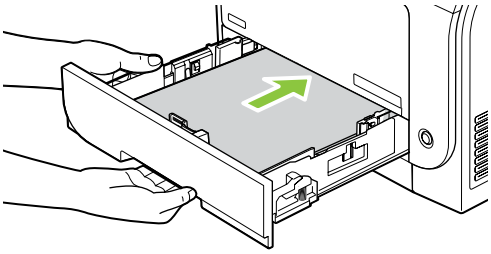

6. Press **OK** to continue printing.

Clear jams in Tray 3

1. Pull out Tray 3 and place it on a flat surface.

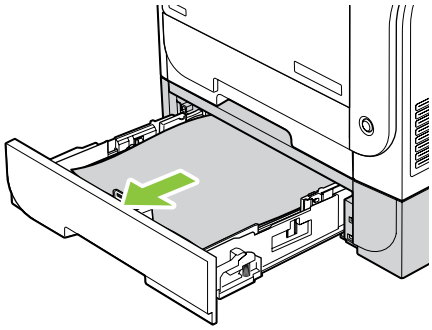

2. Remove the jammed sheet by pulling it straight out.

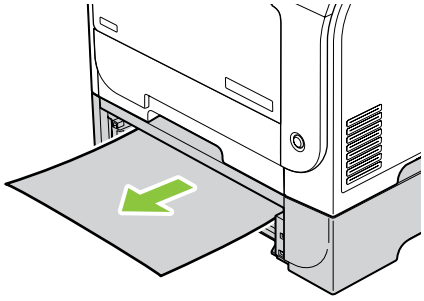

3. Replace Tray 3.

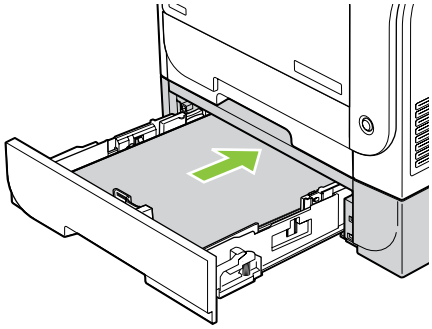

4. Press **OK** to continue printing.

Clear jams in fuser area

1. Open the rear door.

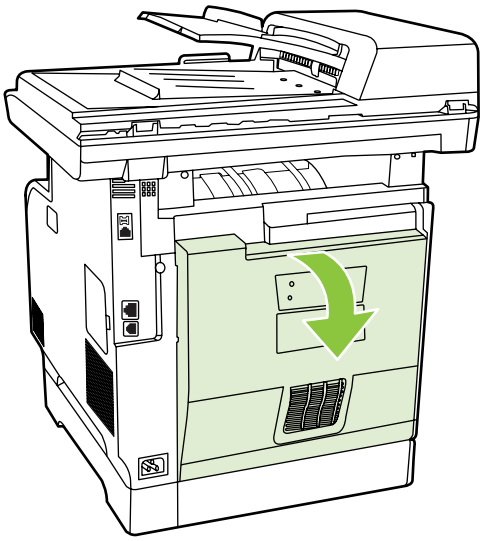

2. If necessary, push the guide (callout 1) and remove any visible paper (callout 2) from the bottom of the delivery area.

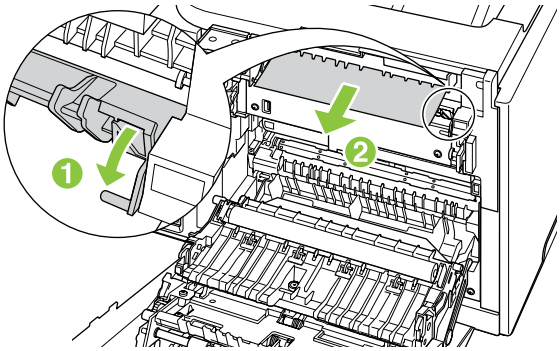

NOTE: If the sheet tears, make sure that all fragments are removed before you resume printing. Do not use sharp objects to remove fragments.

3. Close the rear door.

Clear jams in output bin

1. Look for jammed paper in the output bin area.
2. Remove any visible media. With both hands, grasp the side of the media that is most visible (this includes the middle), and carefully pull it free from the product.

NOTE: If the sheet tears, make sure that all fragments are removed before resuming printing.

3. Open and then close the rear door to clear the message.

Clear jams in duplexer (duplexing models only)

1. Open the rear door.

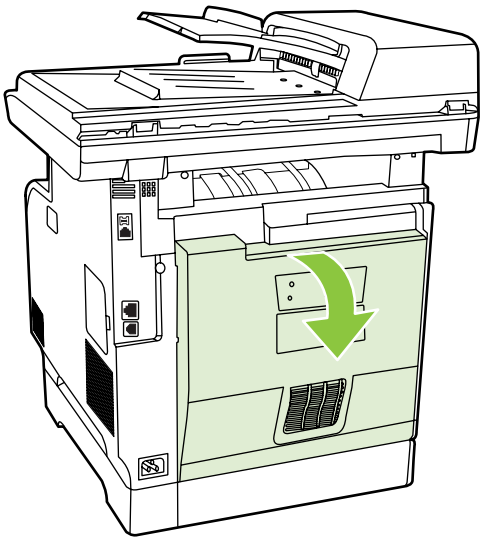

2. If necessary, pull the guide (callout 1) and remove any visible paper (callout 2) from the bottom of the delivery area.

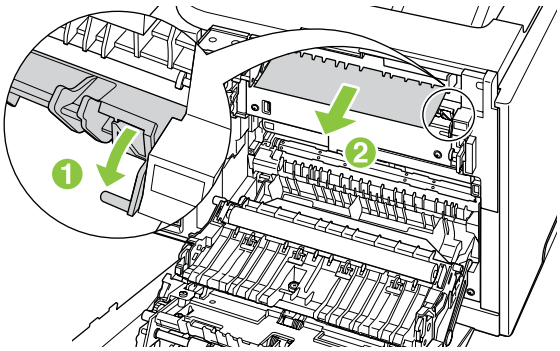

3. If necessary, remove any visible paper from bottom side of the duplexing unit.

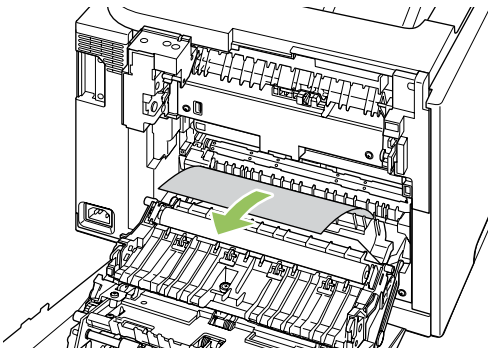

4. If you can not see any jammed paper, lift the duplexing unit using the tab on the side of the duplexing unit.

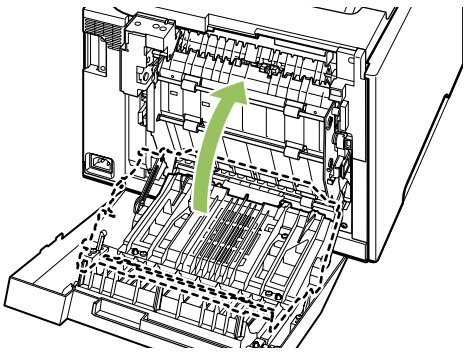

5. If you can see the trailing edge of the paper, remove the paper from the product.

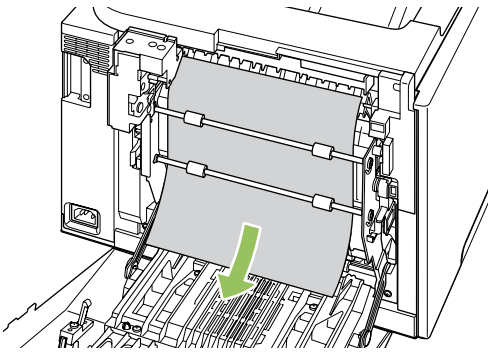

6. If you can see the leading edge of the paper, remove it from the product.

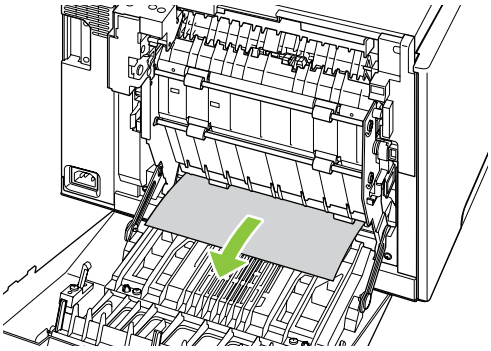

7. Close the rear door.

Clear jams from the ADF

Occasionally, media becomes jammed during a fax, copy, or scan job.

You are notified of a media jam by the **Doc feeder jam Clear, Reload** message that appears on the product control-panel display.

- The ADF input tray is loaded incorrectly or is too full. See Load paper and print media on page 43 for more information.
- The media does not meet HP specifications, such as those for size or type. See Paper and print media on page 37 for more information.

1. Open the ADF cover.

NOTE: Verify that any shipping tape inside the ADF has been removed.

2. Lifting the green lever, rotate the pick mechanism until it stays open.

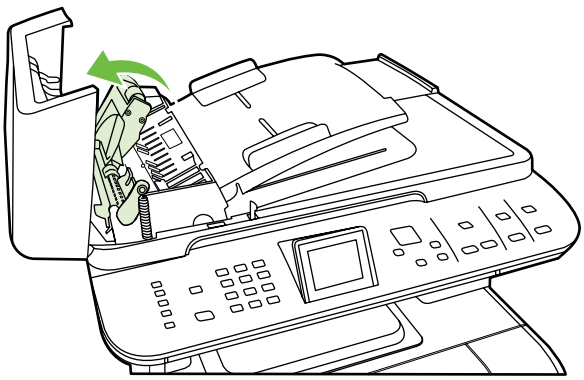

3. Gently try to remove the page without tearing it. If you feel resistance, go to the next step.

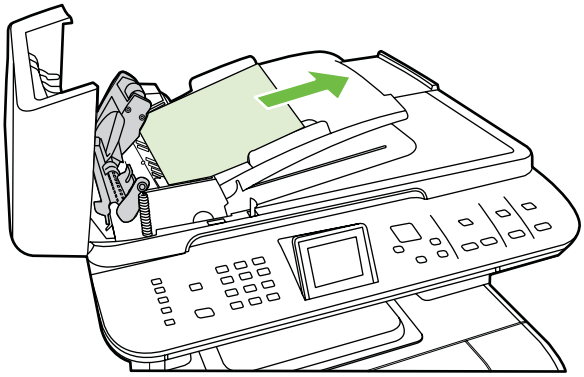

4. Open the ADF lid and gently loosen the media by using both hands.

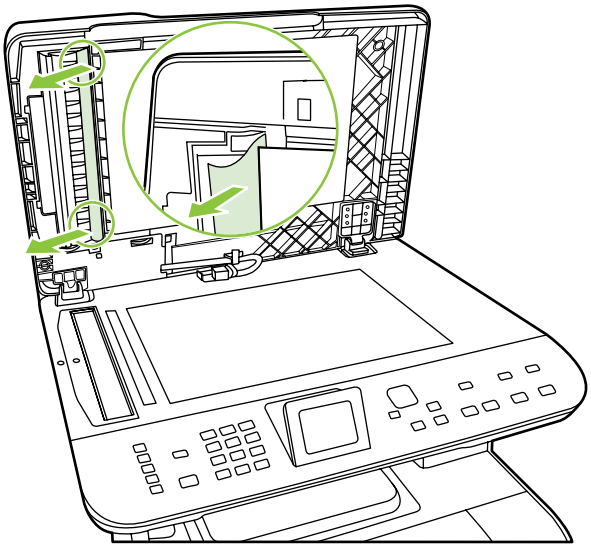

5. When the media is free, gently pull it out in the direction shown.

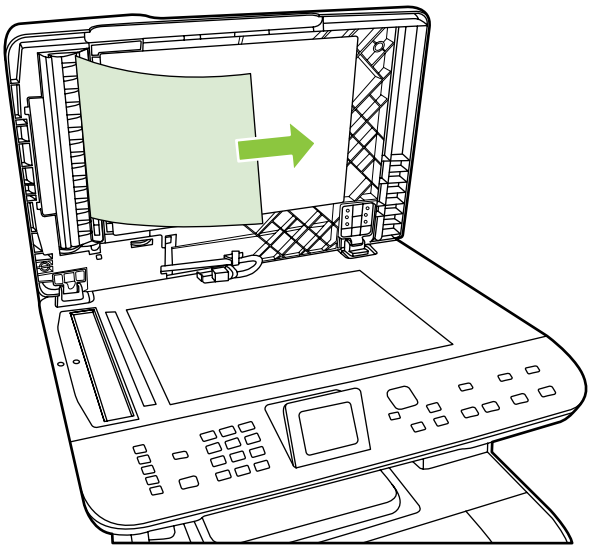

6. Close the lid to the flatbed scanner.

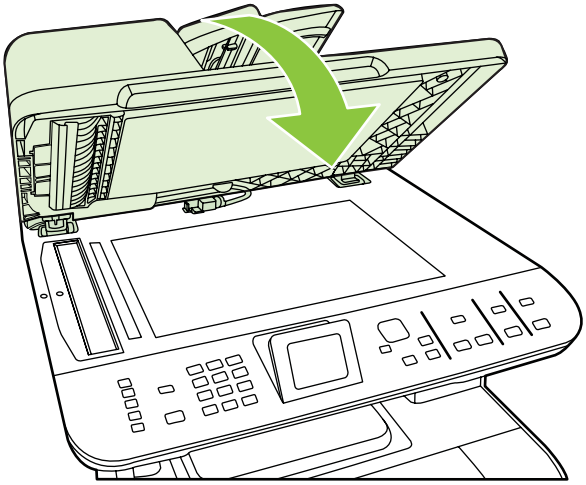

7. Lower the green lever.

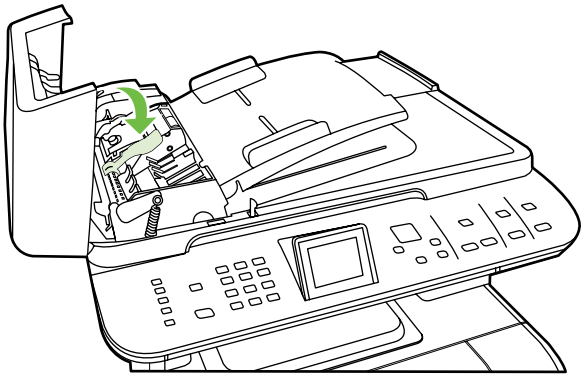

8. Reinstall the cleanout part by inserting it as shown. Push down on the two tabs until the part snaps into place. Install the cleanout part correctly, because future jamming might occur if the cleanout part is not replaced correctly.

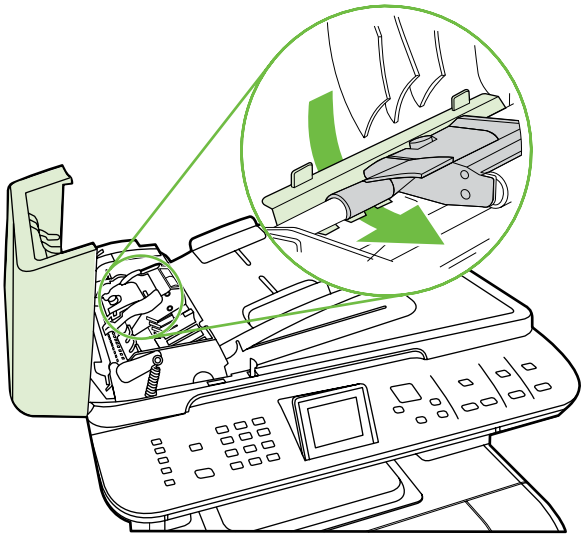

9. Close the ADF lid.

Solve image quality problems

General image quality problems

The following examples depict letter-size paper that has passed through the product short-edge first. These examples illustrate problems that would affect all of the pages that you print, whether you print in color or in black only. The topics that follow list the typical cause and solution for each of these examples.

Problem	Cause	Solution
Print is light or faded.	The media might not meet HP specifications.	Use media that meets HP specifications.
	One or more print cartridges might be defective.	Print the supplies status page to check the remaining life. See Information pages on page 50. Replace any empty or used (refilled) print cartridges. See Print cartridge on page 67.
	The product is set to override the **Replace <Color> Cartridge** message and to continue printing.	Replace any empty or used (refilled) print cartridges. See Print cartridge on page 67.
Toner specks appear.	The media might not meet HP specifications.	Use media that meets HP specifications.
	The paper path might need cleaning.	Clean the paper path. See Clean the paper path on page 73.
Dropouts appear.	A single sheet of print media might be defective.	Try reprinting the job.
	The moisture content of the paper is uneven or the paper has moist spots on its surface.	Try different paper, such as high-quality paper that is intended for color laser printers.
	The paper lot is flawed. The manufacturing processes can cause some areas to reject toner.	Try different paper, such as high-quality paper that is intended for color laser printers.
Vertical streaks or bands appear on the page.	One or more print cartridges might be defective.	Print the supplies status page to check the remaining life. See Information pages on page 50. Replace any empty or used (refilled) print cartridges. See Print cartridge on page 67.
	The product is set to override the **Replace <Color> Cartridge** message and to continue printing.	Replace any empty or used (refilled) print cartridges. See Print cartridge on page 67.

Problem	Cause	Solution
The amount of background toner shading becomes unacceptable.	Very dry (low humidity) conditions can increase the amount of background shading.	Check the product environment.
	The extended print mode setting is incorrect.	Try the print job again using the Transfer extended print mode, Dry paper setting. See the user guide.
	One or more print cartridges might be defective.	Replace any empty or used (refilled) print cartridges. See Print cartridge on page 67.
	The product is set to override the **Replace <Color> Cartridge** message and to continue printing.	Replace any empty or used (refilled) print cartridges. See Print cartridge on page 67.
Toner smears appear on the media.	The media might not meet HP specifications.	Use media that meets HP specifications.
	If toner smears appear on the leading edge of the paper, the media guides are dirty, or debris has accumulated in the print path.	Clean the media guides. Clean the paper path. See Clean the paper path on page 73.
The toner smears easily when touched.	The product is not set to print on the type of media on which you want to print.	In the printer driver, select the **Paper** tab and set **Type is** to match the type of media on which you are printing. Print speed might be slower if you are using heavy paper.
	The media might not meet HP specifications.	Use media that meets HP specifications.
	The paper path might need cleaning.	Clean the paper path. See Clean the paper path on page 73.
Marks repeatedly appear at even intervals on the printed side of the page.	The product is not set to print on the type of media on which you want to print.	In the printer driver, select the **Paper** tab and set **Type is** to match the type of paper on which you are printing. Print speed might be slower if you are using heavy paper.
	Internal parts might have toner on them.	The problem typically corrects itself after a few more pages.
	The paper path might need cleaning.	Clean the paper path. See Clean the paper path on page 73.
	The fuser might be damaged or dirty.	To determine if the fuser has a problem, print the diagnostics page. Clean the paper path. See Clean the paper path on page 73. Use the image defect ruler to determine where the defect is occurring. See Repetitive image defects on page 252.
	A print cartridge may have a problem.	To determine which cartridge has a problem, print the diagnostics page.

Problem	Cause	Solution
Marks repeatedly appear at even intervals on the unprinted side of the page. 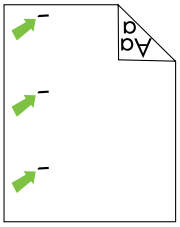	Internal parts might have toner on them.	The problem typically corrects itself after a few more pages.
	The paper path might need cleaning.	Clean the paper path. See Clean the paper path on page 73.
	The fuser might be damaged or dirty.	To determine if the fuser has a problem, print the diagnostics page. Clean the paper path. See Clean the paper path on page 73.
The printed page contains misformed characters. 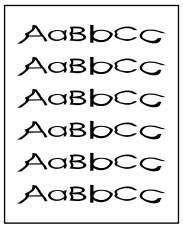	The media might not meet HP specifications.	Use a different paper, such as high-quality paper that is intended for color laser printers.
	If characters are incorrectly formed so that they produce a wavy effect, the laser scanner might need service.	Verify that the problem also occurs on the configuration page. If so, replace the product.
The printed page is curled or wavy. 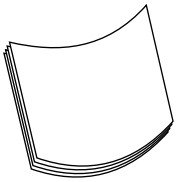	The product is not set to print on the type of media on which you want to print.	In the printer driver, select the **Paper** tab and set **Type is** to match the type of paper on which you are printing. Print speed might be slower if you are using heavy paper.
	The **Service** menu item **Less paper curl** is set to **Off**.	Change the setting to **On**.
	The media might not meet HP specifications.	Use a different paper, such as high-quality paper that is intended for color laser printers.
	Both high temperature and humidity can cause paper curl.	Check the product environment.
Text or graphics are skewed on the printed page. 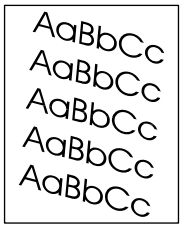	The media might be loaded incorrectly.	Make sure that the paper or other print media is loaded correctly and that the media guides are not too tight or too loose against the stack. See Load paper and print media on page 43.
	The media might not meet HP specifications.	Use a different paper, such as high-quality paper that is intended for color laser printers.

Problem	Cause	Solution
The printed page contains wrinkles or creases. 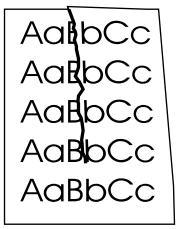 	The media might be loaded incorrectly.	Verify that the media is loaded correctly and that the media guides are not too tight or too loose against the stack. See Load paper and print media on page 43. Turn over the stack of paper in the input tray, or try rotating the paper 180° in the input tray.
	The media might not meet HP specifications.	Use a different paper, such as high-quality paper that is intended for color laser printers.
Toner appears around the printed characters. 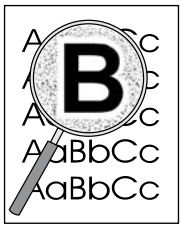 	The media might be loaded incorrectly.	Turn over the stack of paper in the tray.
	If large amounts of toner have scattered around the characters, the paper might have high resistivity.	Use a different paper, such as high-quality paper that is intended for color laser printers.
An image that appears at the top of the page (in solid black) repeats farther down the page (in a gray field).  	Software settings might affect image printing.	In your software program, change the tone (darkness) of the field in which the repeated image appears. In your software program, rotate the whole page 180° to print the lighter image first. In the printer driver, verify that the correct media type is selected.
	The order of images printed might affect printing.	Change the order in which the images are printed. For example, have the lighter image at the top of the page, and the darker image farther down the page.
	A power surge might have affected the product.	If the defect occurs later in a print job, turn the product off for 10 minutes, and then turn on the product to restart the print job.

Solve issues with color documents

This section describes issues that can occur with color print jobs.

Problem	Cause	Solution
Only black is printing when the document should be printing in color. 	Color mode is not selected in your program or printer driver.	Select color mode instead of grayscale mode.
	The correct printer driver might not be selected in the program.	Select the correct printer driver.
	One of the color print cartridges might be empty. If the product is configured to continue printing after a color cartridge has reached the end of its capacity, it will print in black and white.	Replace any empty color print cartridges. See Print cartridge on page 67.
One or more colors are not printing, or are inaccurate. 	Sealing tape might be on the print cartridges.	Verify that the sealing tape has been completely removed from the print cartridges.
	The media might not meet HP specifications.	Use a different paper, such as high-quality paper that is intended for color laser printers.
	The product might be operating in excessively humid conditions.	Verify that the product environment is within humidity specifications.
	One or more print cartridges might be defective.	Replace any empty or used (refilled) print cartridges. See Print cartridge on page 67.
	The product is set to override the **Replace <Color> Cartridge** message and to continue printing.	Replace any empty or used (refilled) print cartridges. See Print cartridge on page 67.
A color is printing inconsistently after you load a new print cartridge. 	Another print cartridge might be defective.	Remove the print cartridge for the color that is printing inconsistently and reinstall it.
	The product is set to override the **Replace <Color> Cartridge** message and to continue printing.	Replace any empty color print cartridges. See Print cartridge on page 67.
The colors on the printed page do not match the colors as they appear on the screen. 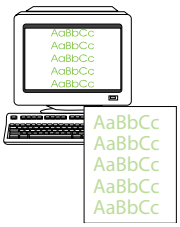	The colors on a computer monitor might differ from the product output.	See the user guide.
	If extremely light colors or extremely dark colors on screen are not printing, the software program might interpret extremely light colors as white or extremely dark colors as black.	If possible, avoid using extremely light or extremely dark colors.
	The media might not meet HP specifications.	Use a different paper, such as high-quality paper that is intended for color laser printers.
The finish on the printed color page is inconsistent.	The media might be too rough.	Use a smooth paper or print media, such as a high-quality paper that is made for

Problem	Cause	Solution
		color laser printers. Generally, smoother media produces better the results.

Copy problems

Prevent copy problems

The following are a few simple steps you can take to improve copy quality:

- Copy from the flatbed scanner. This will produce a higher quality copy than copying from the automatic document feeder (ADF).
- Use quality originals.
- Load the media correctly. If the media is loaded incorrectly, it might skew, causing unclear images and problems with the OCR program. See Load paper and print media on page 43 for instructions.
- Adjust the control panel settings for the type of original if the automatic settings do not produce the desired result.

NOTE: Verify that the media meets HP specifications. If the media meets HP specifications, recurring feed problems indicate a pickup roller, a separation roller, or a separtion pad is worn and needs to be replaced. See Paper-feed rollers and pads on page 127.

Image problems

Problem	Cause	Solution
Copy edges are cropped when copying from the glass.	The original is edge-to-edge or has smaller margins than those supported by this product.	Position the original 6.35 mm (1/4 inch) away from the registration corner on the glass.
Copy edges are cropped when copying from the ADF.	The original is too long, edge-to-edge, or has smaller margins than those supported by this product.	On the control panel, press Copy setup. Use the arrow buttons to select **Reduce/ Enlarge** and press OK. Use the arrow buttons to select **Full Page=91%** and press OK. Try copying again.

Problem	Cause	Solution
Images are missing or faded.	The print-cartridge might be low.	Replace any low print cartridge and then calibrate the product. See Print cartridge on page 67.
	The original might be of poor quality.	If your original is too light or damaged, the copy might not be able to compensate, even if you adjust the contrast. If possible, find an original document in better condition. Use the control-panel to change the contrast setting.
	The original might have a colored background.	Colored backgrounds might cause images in the foreground to blend into the background, or the background might appear in a different shade. If possible, use an original document without a colored background.
	The original is larger than the scannable area	Use supported media sizes.
Vertical white or faded stripes appear on the copy. 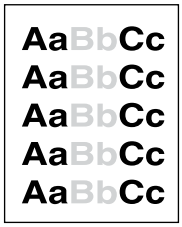	The media might not meet HP specifications.	Use media that meets HP specifications. See Paper and print media on page 37.
	One or more of the print cartridges may be low.	Replace any low print cartridge. See Print cartridge on page 67. If the error persists, contact HP support.
Unwanted lines appear on copy jobs only. 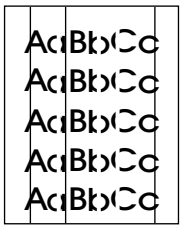	The flatbed scanner or the ADF glass might be dirty.	Clean the flatbed scanner or the ADF glass. See Clean the product on page 73.
	An image exists on the back of the original, or defects exist on the scanner cover.	On the flatbed scanner, place three sheets of clean paper on top of the original, close the flatbed scanner cover, then re-scan the original.
Black dots or streaks appear on copy jobs only.	Ink, glue, correction fluid, or an unwanted substance might be on the automatic document feeder (ADF) or flatbed scanner.	Clean the product. See Clean the product on page 73.
Copies are too light or dark.	The printer driver or product software settings may be incorrect.	Verify that the quality settings are correct. See the product software Help for more information about changing the settings.
	The product may not be calibrated.	Calibrate the product.

Problem	Cause	Solution
Text is unclear.	The printer driver or product software settings may be incorrect.	Verify that the quality settings are correct. See the product software Help for more information about changing the settings.
	The original is of poor quality.	Try copying another document. If the copy is free of defects, obtain a better-quality original.
	The product may not be calibrated.	Calibrate the product.

Media-handling problems

Problem	Cause	Solution
Poor print quality or toner adhesion	The paper is too moist, too rough, too heavy or too smooth, or it is embossed or from a faulty paper lot.	Try another kind of paper, between 100 and 250 Sheffield, 4 to 6% moisture content.
Dropouts, jamming, or curl	The paper has been stored incorrectly.	Store paper flat in its moisture-proof wrapping.
	The paper has variability from one side to the other.	Turn the paper over.
Excessive curl	The paper is too moist, has the wrong grain direction, or is of short-grain construction	Use long-grain paper.
	The paper varies from side-to-side.	Turn the paper over.
Jamming, damage to paper	The paper has cutouts or perforations.	Use paper that is free of cutouts or perforations.
Problems with feeding	The paper has ragged edges.	Use high-quality paper that is made for laser printers.
	The paper varies from side-to-side.	Turn the paper over.
	The paper is too moist, too rough, too heavy or too smooth, has the wrong grain direction, or is of short-grain construction or it is embossed or from a faulty paper lot.	Try another kind of paper, between 100 and 250 Sheffield, 4 to 6% moisture content. Use long-grain paper.
Print is skewed (crooked).	The media guides might be incorrectly adjusted.	Remove all media from the input tray, straighten the stack, and then load the media in the input tray again. Adjust the media guides to the width and length of the media that you are using and try printing again.
More than one sheet feeds at one time.	The media tray might be overloaded.	Remove some of the media from the tray. See Load paper and print media on page 43.
	The media might be wrinkled, folded, or damaged.	Verify that the media is not wrinkled, folded, or damaged. Try printing on media from a new or different package.

Problem	Cause	Solution
The product does not pull media from the media input tray.	The product might be in manual feed mode.	• If **Manual** appears on the product control-panel display, pressOK to print the job. • Verify that the product is not in manual feed mode and print your job again.
	The pickup roller might be dirty or damaged.	Replace the pickup roller assembly. See Pickup roller (Tray 2 and Tray 3) on page 128.

Performance problems

Problem	Cause	Solution
No copy came out.	The input tray might be empty.	Load media in the product. See Load paper and print media on page 43 for more information.
	The original might have been loaded incorrectly.	In the automatic document feeder (ADF), load the original with the narrow side forward and the side to be scanned facing up. Place the original document face-down on the flatbed scanner with the upper-left corner of the document at the corner indicated by the icon on the scanner.
Copies are blank.	The sealing tape might not have been removed from the print cartridge.	Remove the print cartridge from the product, pull out the sealing tape, and reinstall the print cartridge.
	The original might have been loaded incorrectly.	In the ADF, load the original with the narrow side leading into the ADF and the side to be scanned facing up. On the flatbed scanner, make sure that the original document is placed face-down with the upper-left corner of the document at the lower-right corner of the glass.
	The media might not meet HP specifications.	Use media that meets HP specifications. See Paper and print media on page 37.
The wrong original was copied.	The ADF might be loaded.	Make sure that the ADF is empty.
Copies are reduced in size.	The product settings might be set to reduce the scanned image.	On the control panel, select Reduce/Enlarge from the Copy Menu and verify that it is set to **Original=100%**.

Scan problems

Solve scanned-image problems

Problem	Cause	Solution
The scanned image is of poor quality.	The original might be a second-generation photo or picture.	• To eliminate the patterns, try reducing the size of the image after scanning. • Print the scanned image to see if the quality is better. • Verify that the resolution settings are correct for the type of scan job that you are performing. See the user guide. • For best results, use the flatbed scanner for scanning rather than the automatic document feeder (ADF).
	The image that appears on the screen might not be an accurate representation of the quality of the scan.	• Try adjusting your computer monitor settings to use more colors (or levels of gray). Typically, you make this adjustment by opening **Display** in Windows Control Panel. • Try adjusting the resolution settings in the scanner software. See the user guide.
	The original might have been loaded incorrectly.	Use the media guides when you load the originals into the ADF. See Load paper and print media on page 43.
	The scanner glass might be dirty.	Clean the scanner glass. See Clean the scanner glass on page 77.
	The graphics settings might not be suitable for the type of scan job that you are performing.	Try changing the graphics settings. See the user guide.

Problem	Cause	Solution
Part of the image did not scan.	The original might have been loaded incorrectly.	Load the original on the flatbed glass or use the media guides when you load the originals into the ADF. See Load originals for copying, scanning, or faxing on page 45.
	A colored background might be causing images in the foreground to blend into the background.	Try adjusting the settings before you scan the original or enhancing the image after you scan the original.
	The original is longer than 381 mm (15 inches).	The maximum scannable length is 381 mm (15 inches) when you use the automatic document feeder (ADF) input tray. If the page exceeds the maximum length, the scanner stops. (Copies can be longer.) **CAUTION:** Do not try to pull the original from the ADF; you might damage the scanner or the original. See Clear jams from the ADF on page 291.
	The original is too small.	The minimum size that the flatbed scanner supports is 25 x 25 mm (1 x 1 inch). The minimum size that the ADF supports is 127 x 127 mm (5 x 5 inches). The original might be jammed. See Clear jams from the ADF on page 291.
	The media size is incorrect.	In **Scan** settings, make sure that the input media size is large enough for the document that you are scanning. .
The scan takes too long	The resolution is set too high.	Change the resolution settings to the correct settings for your job. See the user guide.
	The software is set to scan in color.	The system default is color, which takes longer to scan even when scanning a monochrome original. If you acquire an image through TWAIN or WIA, you can change the settings so that the original scans in grayscale or black-and-white. See the product software Help for information.
	A print job or copy job was sent before you tried to scan.	If someone sent a print job or copy job before you tried to scan, the scan will start if the scanner is not busy. However, because the product and scanner share memory, the scan might be slower.
	The scanning computer may not have enough available resources.	Close unused applications on the computer. If the scan is still too slow, try rebooting the scanning computer.
	Antivirus, antispyware, or firewall software on the scanning computer may slow scanning.	Consult your antivirus, antispyware, or firewall software documentation.

Scan-quality problems

Prevent scan-quality problems

The following are a few simple steps you can take to improve copy and scan quality.

- Use the flatbed scanner, rather than the automatic document feeder (ADF) input tray, to scan.
- Use high-quality originals.
- Load the media correctly. If the media is loaded incorrectly, it might skew, which causes unclear images. See Load paper and print media on page 43 for instructions.
- Adjust the software program settings according to how you plan to use the scanned page. See the software program help for more information.
- If the product frequently feeds more than one page at a time, the separation roller might need to be replaced. See Paper-feed rollers and pads on page 127.

Solve scan-quality problems

Problem	Cause	Solution
Blank pages	The original might have been loaded upside down.	In the automatic document feeder (ADF), put the top end of the stack of originals into the ADF input tray, with the media stack face-up and the first page to be scanned on top of the stack. Place the original document face-down on the flatbed scanner with the upper-left corner of the document at the corner indicated by the icon on the scanner.
Too light or dark	The resolution and color levels may be set incorrectly.	Verify that you have the correct resolution and color settings. See the user guide.
Unwanted lines	The ADF scanner window might be dirty.	Clean the ADF scanner window. See Clean the scanner glass on page 77 (step 3).
Black dots or streaks	Ink, glue, correction fluid, or an unwanted substance might be on the glass.	Clean the flatbed scanner surface. See Clean the scanner glass on page 77.
	The power to the product might have fluctuated.	Rescan the job.
Unclear text	The resolution levels might be set incorrectly.	Verify that the correct resolution settings are correct. See the user guide.
	The media is not laying flat on the glass.	Close the scanner lid tightly. **NOTE:** On base models, the depth of scan might not allow a good scan of originals that will not sit flat, such as a hardcover book.

Problem	Cause	Solution
Communication errors on the computer	One or more of the product cables is loose.	Check the product cables and make sure they are plugged in securely.
	The product is not on.	Turn the product on.
	If the product is connected through a network, the IP address might have changed.	Verify that the product IP address is correct.
	Antivirus, antispyware, or firewall software may be interfering with communication.	Consult the antivirus, antispyware, or firewall software documentation.
	The product is in an error state.	Check the product control panel and clear any errors by following the onscreen instructions.
	The product is busy with another task.	Wait for the product to finish.
	The wrong scanner driver is selected for the product.	Verify that the scanner driver is correct.
The scan job does not complete.	The resolution may be too high for the available memory on the computer.	Try scanning at a lower resolution.

Solve performance problems

Problem	Cause	Solution
Pages print but are totally blank.	The sealing tape might still be in the print cartridges.	Verify that the sealing tape has been completely removed from the print cartridges.
	The document might contain blank pages.	Check the document that you are printing to see if content appears on all of the pages.
	The product might be malfunctioning.	To check the product, print a configuration page.
Pages print very slowly.	Heavier media types can slow the print job.	Print on a different type of media. If the error persists, update the firmware. If the error persists, perform an NVRAM initialization.
	Complex pages can print slowly.	Proper fusing may require a slower print speed to ensure the best print quality.
Pages did not print.	The product might not be pulling media correctly.	Make sure paper is loaded in the tray correctly. If the problem persists, replace the pickup and separation rollers. See Paper-feed rollers and pads on page 127.
	The media is jamming in the device.	Clear the jam. See Jams on page 281.
	If the error persists, try the following solutions: • Verify that the product will print through the USB or network connection. • Print a configuration page in order to verify that the product will print internal pages. • Perform an NVRAM initialization. • Update the firmware. • Replace the formatter.	

Solve connectivity problems

Solve direct-connection problems

If the product is experiencing connection issues while directly connected to a computer, complete the following steps:

1. Make sure that USB cable is no longer than 2 meters (6 feet).
2. Make sure that both ends of the USB cable are connected.
3. Make sure that the cable is a USB 2.0 Hi-Speed-certified cable.
4. If the error persists, replace the USB cable with a known good USB 2.0 Hi-Speed-certified cable.
5. At the product control panel, in the **Service** menu, verify that the **USB speed** setting is set to **Full**.
6. If the error persists, update the USB drivers on the computer.

Solve network problems (network models only)

Check the following items to verify that the product is communicating with the network. Before you begin this troubleshooting procedure, print a network report. See Information pages on page 50.

1. Are any physical connection problems evident between the workstation or file server and the product?

   Verify that the network cabling, connections, and router configurations are correct. Verify that the network cable lengths meet network specifications.

2. Are the network cables connected correctly?

   Make sure that the product is attached to the network through the appropriate port and cable. Check each cable connection to make sure that it is secure and in the right place. If the problem continues, try a different cable or connect to different ports on the hub or transceiver. The amber activity light and the green link status light next to the port connection on the back of the product should be lit.

3. Can you "ping" the product? (Windows)

   NOTE: Mac, Unix, and Linux users can use a terminal window to “ping” the product.

   a. Click **Start**, click **Run**, type `cmd`, and click **OK** to open an MS-DOS command prompt.

   b. Type `ping` followed by the product IP address. For example, type: `ping 192.168.45.39`

      If the ping command is successful, a list of replies from the product appears in the window.

   c. If you can ping the product, print a configuration page to verify that the IP address configuration for the product is correct on the computer. If it is correct, uninstall the product software, and then reinstall it.

      -or-

      If the ping command failed, verify that the network hubs are on, and then verify that the network settings, the product, and the computer are all configured for the same network. Also, verify that no firewall or spyware filters are on.

4. Have any software programs been added to the network?

   Make sure new programs are compatible and that they are installed correctly and use the correct printer drivers.

5. Can other users print?

   The problem might be workstation-specific. Check the workstation network drivers, printer drivers, and redirection.

6. If other users can print, are they using the same network operating system?

   Check your system for the correct network operating system setup.

7. Is the protocol enabled on the product?

   Check the network protocol status on the network report. You can also use the embedded Web server, HP ToolboxFX, or Macintosh Configure Device to check the status of other protocols.

Service mode functions

Service menu

Use the control-panel **Service** menu to troubleshoot product problems.

Service menu settings

The **Service** menu is used to calibrate, restore factory default settings, and clean the print paper path.

The following **Service** menu items are available:

- **Fax Service**—used to test, diagnose, and maintain the fax functionality.
- **Cleaning mode**—used to remove dust and toner from the print paper path
- **PowerSave Time**—used to configure the amount of idle time before the engine enters sleep mode
- **USB Speed**—used to set the USB speed
- **Less Paper Curl**—used to decrease the fuser temperature, which can reduce paper curl
- **Archive Print**—used to decrease the likelihood of toner smearing on a print job
- **Restore defaults**—used to reset all customer-accessible menu settings back to the factory default settings (except language) via the control panel or software

NOTE: This menu item does not reset factory-settable settings, including formatter number, page counts, factory paper settings, language, and so on.

Secondary service menu

Use the secondary service menu to print service-related reports and to run special tests. Customers do not have access to this menu.

Open the secondary service menu

1. Make sure the product is in the Ready state.
2. Press Setup to enter the main menus.
3. Simultaneously press the left arrow button ◄ and Cancel.
4. Press Setup to return to the main menus.
5. Use the arrow buttons to highlight **2ndry Service**, and then press OK.
6. Use the arrow keys to navigate through the menu.

Secondary service menu structure

Table 7-15 Secondary service menu

Menu item	Sub-menu item	Description
Service Reports	**Cont. Self-Test**	This item prints a continuous configuration page.
	Extended Keymap (fax/ memory-card models only)	This item prints an extended key map for the alphanumeric keypad on the control panel.
	Error report	This item prints an error report.
Scan Calibration	**Calibrate** **Corrected** **Tables** **Test**	This item calibrates the product.
Location	A list of available locations appears	This item sets certain product parameters that are dependent on the location, such as the default paper size and the symbol set. Scroll to the appropriate location and select **Yes** to set the location. The product automatically restarts after you change the location.
Display test		This test verifies that the LEDs and characters on the control-panel display function correctly. At the beginning of the test, each of the LEDs is turned on one-at-time. Press OK to continue to the next LED. After the LED test is complete, the character test begins by testing the pixels on each line. Then, each of the 255 characters is displayed in groups of 16. Press OK to continue to the next group of 16 characters. You can cancel the test at any time by pressing Cancel.
Button test		This test verifies that the control-panel buttons function correctly. The display prompts you to press each button.
Show FW Version		This item shows the current date code of the firmware.
Ethernet reset (network models only)		This item resets the ethernet driver. This should be used when the network is not accessible. This is a low-level, internal reset and does not affect network settings.
Memory Cards (fax/memory-card models only)	**Enable** **Disable**	This item enables or disables the product memory-card functions.
Color Cal.	**Adjust color**	This item adjusts density settings for contrast, highlights, midtones, and shadows. Adjust each color individually.
	Timing	This item specifies how frequently the product should automatically perform a color calibration. The default setting is 48 hours. You can turn automatic calibration off.
Clean Belt		This item runs additional belt-cleaning cycles.
Pick roller		This item puts the pickup roller in position for replacement.

Product resets

The product resets—**Restore defaults** and the NVRAM initialization—perform the same function. If possible, use the **Restore defaults** function in the **Service** menu. If that menu is not accessible, use the NVRAM sequence.

Restore the factory-set defaults

NOTE: Before restoring defaults, print a menu structure report and a configuration page. Use the information on these pages to reset customer-specific settings.

CAUTION: All onboard network settings are also reset. Be sure to print a configuration page before restoring defaults. Make note of the IP address that is listed on the Jetdirect configuration page. You might need to restore the IP address after restoring the defaults.

1. Press Setup to open the menus.
2. Use the arrow buttons to select **Service**, and then press OK.
3. Use the arrow buttons to select **Restore defaults**, and then press OK.

   The product automatically restarts.

NVRAM initialization

Performing an NVRAM initialization resets the following settings and information:

- All menu settings are reset to factory default values.
- All localization settings, including language and country/region, are reset.

CAUTION: All onboard network settings are also reset. Be sure to print a configuration page before restoring defaults. Make note of the IP address that is listed on the Jetdirect configuration page. You might need to restore the IP address after an NVRAM initialization.

After performing an NVRAM initialization, reconfigure any computers that print to this product. Uninstall and then reinstall the product software on the computers.

1. Turn the product off.
2. Simultaneously press the right arrow button ► and the Cancel button ✖. Hold these buttons as you turn the product on.
3. When **Permanent storage init.** appears on the display, release both buttons.

When the product has finished the NVRAM initialization, it returns to the Ready state.

Solve fax problems (fax/memory-card models only)

Fax logs and reports

NOTE: Not all fax products are compatible with DSL or ISDN services. HP does not guarantee that the product will be compatible with all DSL/ISDN service lines or providers. If you are having problems using the product with these services, contact the service provider for more information or for assistance.

Print all fax reports

Use this procedure to print all of the following reports at one time:

- Fax activity log
- Phone book report
- Configuration report
- Usage page
- Junk-fax list
- Billing report (if the option is turned on)

1. On the control panel, press Fax Menu.
2. Use the arrow buttons to select **Reports**, and then press OK.
3. Use the arrow buttons to select **All fax reports**, and then press OK. The product exits the menu settings and prints the reports.

Print individual fax reports

Use the control panel to print the following fax logs and reports:

- **Fax activity log:** Provides a chronological history of the last 40 faxes that were received, sent, or deleted, and any errors that occurred.
- **Phone book report:** Lists the fax numbers that are assigned to the phone book entries, including speed dials and group-dial entries.
- **Block-fax list:** Lists the fax numbers that are blocked from sending faxes to the product.
- **Last call report:** Provides information about the last fax sent from or received at the product.

1. On the control panel, press Fax Menu.
2. Use the arrow buttons to select **Reports**, and then press OK.
3. Use the arrow buttons to select the report to be printed, and then press OK. The product exits the menu settings and prints the report.

   NOTE: If you selected **Fax Activity log** and pressed OK, press OK again to select **Print log now**. The product exits the menu settings and prints the log.

Set the fax activity log to print automatically

You can decide whether or not you want the fax log to print automatically after every 40 entries. The factory-set default is **On**. Use the following steps to set the fax activity log to print automatically:

1. On the control panel, press Fax Menu.
2. Use the arrow buttons to select **Reports**, and then press OK.
3. Use the arrow buttons to select **Fax Activity log**, and then press OK.
4. Use the arrow buttons to select **Auto Log Print**, and then press OK.
5. Use the arrow buttons to select **On**, and then press OK to confirm the selection.

Set the fax error report

A fax error report is a brief report that indicates the product experienced a fax job error. It can be set to print after the following events:

- on Every error (the factory-set default)
- on Send error
- on Receive error
- Never

NOTE: If you select **Never**, you will have no indication that a fax failed to be transmitted unless you print a fax activity log.

1. On the control panel, press Fax Menu.
2. Use the arrow buttons to select **Reports**, and then press OK.
3. Use the arrow buttons to select **Fax Error Report**, and then press OK.
4. Use the arrow buttons to select the option for when you want the fax error reports to be printed.
5. Press OK to save the selection.

Set the fax confirmation report

A confirmation report is a brief report that indicates the product successfully sent or received a fax job. It can be set to print after the following events:

- on Every fax
- on Send fax only
- on Receive fax only
- Never (the factory-set default)

1. On the control panel, press Fax Menu.
2. Use the arrow buttons to select **Reports**, and then press OK.
3. Use the arrow buttons to select **Fax Confirmation**, and then press OK.

4. Use the arrow buttons to select the option for when you want the fax error reports to be printed.
5. Press OK to save the selection.

Include the first page of each fax on the fax confirmation, fax error, and last call reports

If this option is turned on and the page image still exists in the product memory, the fax configuration, fax error, and last call reports include a thumbnail (50% reduction) of the first page of the most recent fax that was sent or received. The factory-set default for this option is **On**.

1. On the control panel, press Fax Menu.
2. Use the arrow buttons to select **Reports**, and then press OK.
3. Use the arrow buttons to select **Include first page**, and then press OK.
4. Use the arrow buttons to select **On**, and then press OK to confirm the selection.

Perform a fax test

The fax test checks for an working phone line and verifies that the phone cord is plugged into the correct port.

To perform a fax test:

1. On the control panel, press Setup 🔧.
2. Use the arrow buttons to select **Service**, and then press OK.
3. Use the arrow buttons to select **Fax Service**, and then press OK.
4. Use the arrow buttons to select **Run Fax Test**, and then press OK.

When the fax test completes, a report is printed from the product. The report contains one of three possible results:

- **Pass:** the report contains all of the current fax settings for review.
- **Fail - the cord is in the wrong port:** the report contains suggestions for how to resolve the issue.
- **Fail - the phone line is not active:** the report contains suggestions for how to resolve the issue.

Change error correction and fax speed

Set the fax-error-correction mode

Usually, the product monitors the signals on the telephone line while it is sending or receiving a fax. If the product detects an error during the transmission and the error-correction setting is **On**, the product can request that the portion of the fax be resent. The factory-set default for error correction is **On**.

You should turn off error correction only if you are having trouble sending or receiving a fax, and you are willing to accept the errors in the transmission. Turning off the setting might be useful when you are trying to send a fax internationally or receive one, or if you are using a satellite telephone connection.

1. On the control panel, press Setup 🔧.
2. Use the arrow buttons to select **Service**, and then press OK.

3. Use the arrow buttons to select **Fax Service**, and then press OK.
4. Use the arrow buttons to select **Error correction**, and then press OK.
5. Use the arrow buttons to select **On** or **Off**, and then press OK to save the selection.

Change the fax speed

The fax-speed setting is the modem protocol that the product uses to send faxes. It is the worldwide standard for full-duplex modems that send and receive data across telephone lines at up to 33,600 bits per second (bps). The factory-set default for the fax-speed setting is **High (V.34)**.

You should change the setting only if you are having trouble sending a fax to or receiving a fax from a particular device. Decreasing the fax speed might be useful when you are trying to send a fax overseas, or receive one from overseas, or if you are using a satellite telephone connection.

1. On the control panel, press Fax Menu.
2. Use the arrow buttons to select **Advanced setup**, and then press OK.
3. Use the arrow buttons to select **Fax Speed**, and then press OK.
4. Use the arrow buttons to select a speed setting, and then press OK.

Problems sending faxes

Problem	Cause	Solution
The document stops feeding in the middle of faxing.	The maximum length of a page that you can load is 381 mm (15 inches). Faxing of a longer page stops at 381 mm (15 inches).	Print the document on shorter media. If no jam exists and less than one minute has elapsed, wait a moment before pressing Cancel. If a jam exists, remove the jam. Then, resend the job. Verify that the document feeder (ADF) is working correctly. If it is not, replace the ADF. Clear the fax memory. If the error persists, perform an NVRAM initialization. If the error persists, update the firmware. If the error persists, replace the formatter.
	If the item is too small, it can jam inside the automatic document feeder (ADF).	Use the flatbed scanner. The minimum page size for the ADF is 127 x 127 mm (5 x 5 inches). If a jam exists, remove the jam. Then, resend the job.

Problem	Cause	Solution
Faxes stop during sending.	The receiving fax machine might be malfunctioning.	Try sending to another fax machine.
	The telephone line might not be working.	Turn up the volume on the product, and then press Start Fax on the control panel. If you hear a dial tone, the telephone line is working. Perform a fax test to verify that the phone line works and is plugged into the correct port (see Perform a fax test on page 316). Check the fax log for errors. Check the T.30 trace report for errors. Clear the fax memory. If the error persists, perform an NVRAM initialization. If the error persists, update the firmware.
	A communication error might be interrupting the fax job.	Change the redial-on-communication-error setting to **On**.
The product is receiving faxes but is not sending them.	If the product is on a digital system, the system might be generating a dial tone that the product cannot detect.	Disable the detect-dial-tone setting. If the error persists, contact the system service provider.
	A poor telephone connection might exist.	Try again later.
	The receiving fax machine might be malfunctioning.	Try sending to another fax machine.
	The telephone line might not be working.	Do one of the following: • Turn up the volume on the product and press Start Fax on the control panel. If a dial tone exists, the telephone line is working. • Perform a fax test to verify that the phone line works and is plugged into the correct port (see Perform a fax test on page 316).
Outgoing fax calls continue to be dialed.	The product automatically redials a fax number if the redial options are set to **On**.	To stop the product from redialing a fax, press Cancel. Or change the redial setting.

Problem	Cause	Solution
Sent faxes are not arriving at the receiving fax machine.	The receiving fax machine might be off or might have an error condition, such as being out of paper.	Call the recipient to verify that the fax machine is on and ready to receive faxes.
	The originals might be incorrectly loaded.	Verify that the original documents are correctly loaded into the ADF input tray or flatbed scanner.
	A fax might be in memory because it is waiting to redial a busy number, other jobs that are ahead of it are waiting to be sent, or the fax is set up for a delayed send.	If a fax job is in memory for any of these reasons, an entry for the job appears in the fax log. Print the fax activity log and check the **Status** column for jobs that show a **Pending** designation.
Sent faxes include a block of gray shading at the end of each page.	The glass-fax size might be set incorrectly.	Verify that the setting is correct.
Sent faxes have data missing from the end of each page.	The glass-fax size might be set incorrectly.	Verify that the setting is correct.
The control panel shows a low-memory error.	The fax might be too large, or the resolution might be too high.	Try one of the following: • Divide a large fax into smaller sections, and then fax them individually. • Clear stored faxes to make more memory available for outgoing faxes. • Configure the outgoing fax as a delayed fax, and then verify that it will send completely. • Make sure that the product is using the lowest resolution setting (**Standard**).

Problems receiving faxes

Use the table in this section to solve problems that might occur when receiving faxes.

NOTE: Use the fax cord that came with the product in order to ensure that the product functions correctly.

Problem	Cause	Solution
The product cannot receive faxes from an extension telephone.	The extension-telephone setting might be disabled.	Change the extension-telephone setting.
	The fax cord might not be securely connected.	Verify that the fax cord is securely connected between the telephone jack and the product (or another device that is connected to the product). Wait until you hear fax tones, then press 1-2-3 in sequence, wait for three seconds and hang up.
	The product dialing mode might be incorrectly set, or the extension phone might be incorrectly set.	Verify that the product dialing mode is set to **Tone**. Verify that the extension phone is set up for tone dialing as well.

Problem	Cause	Solution
The product is not answering incoming fax calls.	The answer mode might be set to **Manual**.	If the answer mode is set to **Manual**, the product does not answer calls. Start the fax-receiving process manually.
	The rings-to-answer setting might not be set correctly.	Check the rings-to-answer setting to verify that it is set properly.
	The answer-ring pattern feature might be turned on, but you do not have the service, or you do have the service and the feature is not set correctly.	Check the answer-ring pattern feature to verify that it is set properly.
	The fax cord might not be correctly connected, or the fax cord is not working.	Perform a fax test to verify that the phone line works and is plugged into the correct port (see Perform a fax test on page 316).
	The product might not be able to detect incoming fax tones because the answering machine is playing a voice message.	Re-record the answering machine message, leaving at least two seconds of silence at the beginning of the message.
	Too many devices might be connected to the telephone line.	Do not attach more than three devices to the line. Remove the last device that was connected and determine whether the product works. If not, continue removing devices one at a time and retry after removing each one.
	The telephone line might not be working.	Do one of the following: • Increase the volume on the product, and then press Start Fax on the control panel. If a dial tone exists, the telephone line is working. • Perform a fax test to verify that the phone line works and is plugged into the correct port (see Perform a fax test on page 316). • Replace the phone cord. • Perform an NVRAM initialization.

Problem	Cause	Solution
The product is not answering incoming fax calls.	A voice-messaging service might be interfering with the product as it attempts to answer calls.	Do one of the following: • Disable the messaging service. • Get a telephone line that is dedicated to fax calls. • Set the product answer mode to **Manual**. In manual mode, you must start the fax-receive process yourself. • Leave the product set to automatic mode and lower the rings-to-answer setting for the product to a number less than the rings-to-answer setting for the voice mail. The product will answer all incoming calls.
	The product might be out of paper and the memory is full.	Refill the media input tray. Press OK. The product prints all of the faxes it has saved in memory and then resumes answering fax calls.
Faxes are not printing.	The media input tray is empty.	Load media. Any faxes that are received while the input tray is empty are stored in memory and will print after the tray has been refilled.
	The product has encountered an error.	Check the control panel for an error message, and then see Control-panel messages on page 257.
	The sending fax number is on the junk faxes list.	Check the junk faxes list and remove the number.
	The Private Receive feature is turned on.	Turn off the Private Receive feature or access the saved faxes using the preset PIN.
Faxes are printing on two pages instead of one.	The autoreduction setting might not be set correctly.	Turn on the autoreduction setting.
	The incoming faxes might have been sent on larger media.	Adjust the fit-to-page setting to allow larger pages to be printed on one page. For more information, see the user guide.
Received faxes are too light, are blank, or have poor print quality.	The product ran out of toner while printing a fax.	The product stores the most recently printed faxes. (The amount of memory that is available determines the actual number of faxes stored for reprinting.) As soon as possible, replace the print cartridge, and then reprint the fax.
	The fax that was sent was too light.	Contact the sender and have the sender resend the fax after altering the contrast settings.

Performance problems

Problem	Cause	Solution
Faxes are transmitting or being received very slowly.	The fax might be very complex, such as one with many graphics.	Complex faxes take longer to be sent or received. Breaking longer faxes into multiple jobs and decreasing the resolution can increase the transmission speed.
	The receiving fax machine might have a slow modem speed.	The product sends the fax only at the fastest modem speed that the receiving fax machine can accept.
	The resolution at which the fax was sent or is being received might be very high.	To receive the fax, call and ask the sender to lower the resolution and resend the fax. To send the fax, lower the resolution and resend the fax.
	The telephone line might be experiencing line noise.	Hang up and resend the fax. Have the telephone company check the telephone line. If the fax is being sent via a digital phone line, contact the service provider.
	The fax is being sent via an international call.	Allow more time to transmit fax jobs internationally.
	The original document has a colored background.	Reprint the original document with a white background, and then resend the fax.
The fax activity logs or fax call reports are printing at inappropriate times.	The fax activity log or fax call reports settings are not correct.	Print a configuration page and check when the reports print.
The product sounds are too loud or too soft.	The volume setting might not be adjusted correctly.	Adjust the product volume setting.

Memory card problems (fax/memory-card models only)

This section helps you identify and resolve memory card-related problems.

Missing or wrong files

Use the table in this section to solve problems with memory-card files.

Problem	Cause	Solution
The product cannot detect files on the memory card.	The memory card might be missing or inserted incorrectly.	Verify that the memory card is inserted correctly.
	The files might not be in the correct format.	To print from the product control panel, the files must be in the sRGB JPEG format. To print other formats, you must use a software program on your computer.
	You might have inserted more than one memory card.	Only one card slot can be occupied for the product to detect JPEG files. Verify that only one card is inserted.
	There might be a hardware problem.	If a memory card is inserted in the correct slot and the memory card LED is not lit, verify that all formatter connectors are firmly connected. If the error persists, replace the memory-card reader assembly. If the error persists, replace the formatter.

Index page not printing

Use the table in this section to solve problems with index-page printing.

Problem	Cause	Solution
The index page will not print.	The memory card might have been removed before the product could print the page.	Reinsert the card and reprint the index page. If the error persists, try printing from another memory card.
	You might have inserted more than one memory card.	Only one card slot can be occupied for the product to detect JPEG files. Verify that only one card is inserted.
	One or more print cartridges might be low.	Replace any low print cartridges. See Print cartridge on page 67.
	The files on the memory card might not be in the sRGB JPEG format.	Verify that the files on the memory card are in the sRGB JPEG format.
	If the error persists, perform an NVRAM initialization. If the error persists, update the firmware.	

Proof sheet not printing

Use the table in this section to solve problems with proof-sheet printing.

Problem	Cause	Solution
The proof sheet will not print.	The memory card might have been removed before the product could print the page.	Reinsert the card and reprint the proof sheet.
	You might have inserted more than one memory card.	Only one card slot can be occupied for the product to detect JPEG files. Verify that only one card is inserted.
	One or more print cartridges might be low.	Replace any low print cartridges. See Print cartridge on page 67.

Proof sheet not scanning

Use the table in this section to solve problems with proof-sheet scanning.

Problem	Cause	Solution
The proof sheet will not scan correctly.	The flatbed scanner glass might be dirty.	Clean the flatbed scanner glass. See Clean the product on page 73.
	The automatic document feeder (ADF) might be loaded.	Remove any media from the ADF.
	The scanner might not be able to read the photo selections. This feature has been optimized and tested for use with Genuine HP Toner Supplies (variations in color shading can impact the performance of this feature).	Use a software program to print the photo from your computer. Print photos directly from the memory card by using the control panel. Verify that you have colored the bubbles darkly enough for the scanner to read. Install HP supplies in the product and reprint the proof sheet.
	The proof sheet might be loaded incorrectly.	On the flatbed scanner, place the original document face-down with the upper-left corner of the document at the corner indicated by the icon on the scanner. Make sure that the proof sheet is not crooked. The product will not scan a proof sheet from the ADF.
	The proof sheet might have been skewed when it was printed.	Reprint the proof sheet with correctly loaded paper. Verify that the proof sheet is not skewed when it exits the product.
	The scanner might be experiencing problems.	See Scan problems on page 304.

Issues with photo printing

Use the table in this section to solve problems with photo printing.

Problem	Cause	Solution
The wrong photo printed.	An incorrect memory card might be inserted.	Verify that the correct memory card is inserted.
	You might have selected the wrong number from the memory card.	If you cannot remember the number of the photo that you wish to print, print an index page to verify the file number. See the user guide.
The photo did not print.	The media input tray might be empty.	Load media into the input tray.
	The memory card might have been removed before the product could print the photo.	Reinsert the card and reprint the photo.
	The proof sheet is skewed.	Verify that the paper guides are positioned correctly against the paper in the input tray. Reprint the proof sheet. Verify that the images on the proof sheet are aligned properly, and then reselect the images you want to print.
	The memory card might be defective.	Try printing from another memory card.
	The proof sheet is not aligned properly on the scanner.	Realign the proof sheet face-down on the flatbed scanner, with the upper-left corner of the document located in the lower-right corner of the glass.
The photo quality is unacceptable.	The original photo quality might be poor, or it might have a low resolution.	Use a software program to enhance photo quality, and then print the photo from your computer.
	The default settings on the printer might not produce the desired quality.	Use a software program to print the photo at the desired settings.
The photo is the wrong size.	The appropriate job size might not be available from the product control panel.	Use a software program to resize the photo at the desired settings, and then print the photo from your computer.
	You might have selected an incorrect job size.	Verify that the correct setting is selected at the product control panel.
Cannot edit, save, or delete images on the memory card.	The product cannot read the memory card.	Verify that the memory card is properly inserted and that the card is one that is supported. Verify that the memory card is not write-protected. **NOTE:** You cannot edit memory-card files from the product control panel. Use a software program to edit, delete, or save images.
Scanner did not read proof sheet.	The product is using non-HP supplies. This feature has been optimized and tested for use with Genuine HP Toner Supplies (variations in color shading can impact the performance of this feature).	Use a software program to print the photo from your computer. Print photos directly from the memory card by using the control panel.

Problem	Cause	Solution
		Verify that you have colored the bubbles darkly enough for the scanner to read. Install HP supplies in the product and reprint the proof sheet.
	The proof sheet is skewed.	Verify that the paper guides are positioned correctly against the paper in the input tray. Reprint the proof sheet. Verify that the images on the proof sheet are aligned properly, and then reselect the images you want to print.

8 Parts and diagrams

NOTE: In this chapter, part numbers are listed only for available replaceable parts.

Order parts, accessories, and supplies

You can obtain the following items directly from HP:

- **Replacement parts:** To order replacement parts in the U.S., go to www.hp.com/go/hpparts. Outside the United States, order parts by contacting your local authorized HP service center.
- **Supplies and accessories:** To order supplies in the U.S., go to www.hp.com/go/ljsupplies. To order supplies worldwide, go to www.hp.com/ghp/buyonline.html. To order accessories, go to www.hp.com/support/CM2320series.

Part numbers

Supplies

Product name	Part number	Service part number
Black print cartridge with HP ColorSphere toner	CC530A	CC530-67901
Cyan print cartridge with HP ColorSphere toner	CC531A	CC531-67901
Yellow print cartridge with HP ColorSphere toner	CC532A	CC532-67901
Magenta print cartridge with HP ColorSphere toner	CC533A	CC533-67901

NOTE: For information about the yield for the cartridges, see www.hp.com/go/pageyield. Actual yield depends on specific use.

Memory

Product name	Description	Part number
Memory upgrades (DIMMs)	64 MB	C1887A
	128 MB	C9121A

Cable and interface accessories

Product name	Description	Part number
USB cable	2-meter standard USB-compatible device connector	Q6264A
	3-meter standard USB-compatible device connector	C6520A

Repair kits

Product name	Description	Part number
Multipurpose tray paper pickup kit	Tray 1 paper pickup roller and separation pad	CC436-67904
Paper pickup roller kit	Pickup roller assembly, separation roller assembly, and holder cover	CC430-67901
Scanner assembly (fax/memory-card models)	Scanner assembly for fax/memory-card models	CC436-67902
Scanner assembly (base models)	Scanner assembly for base models	CC436-67903

User-replaceable parts

Product name	Description	Part number
Automatic document feeder (ADF)	Replace when the ADF is damaged or not working correctly.	CC434-67902 (base models and fax models) CC436-67901 (memory-card models only)
ADF pickup roller assembly	Replace when the ADF pages skew or jam.	5851-3580
Legal media cover kit	Optional cover (used when the tray is loaded with legal-size media)	CB493-60101
Tray 3	250-sheet input tray for standard sizes	CB500-67902

Whole unit replacement part numbers

If a lower-level replacement part is not available, use the tables in this section to find the engine replacement part number for a specific product bundle and localized configuration.

Table 8-1 Whole unit replacement, product bundle CC434 (base models)

Country/region	Replacement part number
Brazil	CC434-69001
Mexico	CC434-69002
Taiwan	CC434-69003
Singapore, Malaysia, Brunei, Vietnam, Australia, New Zealand	CC434-69004
Argentina, Chile, Peru	CC434-69005
Germany, France, Netherlands, Italy, Spain, Great Britain, Switzerland, Belgium, Portugal, South Africa, Middle East	CC434-69006
Norway, Sweden, Finland, Denmark	CC434-69007
Czech Republic, Slovakia, Poland, Hungary, Russia, Turkey, Croatia, Romania, Slovenia, Greece, Israel	CC434-69008
Korea, China, Thailand, Hong Kong SAR	CC434-69009

Table 8-2 Whole unit replacement, product bundle CC436 (fax models)

Country/region	Replacement part number
Brazil	CC436-69001
Taiwan, Canada, United States, Mexico	CC436-69002
Argentina, Chile, Peru	CC436-69003
Singapore, Malaysia	CC436-69004
All other unlisted 220V Asian-Pacific countries/regions	CC436-69005
All European Union countries/regions	CC436-69006

Table 8-3 Whole unit replacement, product bundle CC435 (memory-card models)

Country/region	Replacement part number
Brazil	CC435-69001
Taiwan, Canada, United States, Mexico	CC435-69002
Argentina, Chile, Peru	CC435-69003
Singapore, Malaysia	CC435-69004
All other unlisted 220V Asian-Pacific countries/regions	CC435-69005
All European Union countries/regions	CC435-69006

How to use the parts lists and diagrams

The figures in this chapter show the major subassemblies in the product and their component parts. A parts list table follows each exploded view assembly diagram. Each table lists the item number, the associated part number, and the description of each part. If a part is not listed in the table, then it is not a field replacement unit (FRU).

△ **CAUTION:** Be sure to order the correct part. When looking for part numbers for electrical components, pay careful attention to the voltage that is listed in the description column. Doing so will ensure that the part number selected is for the correct all-in-one model.

NOTE: In this manual, the abbreviation “PCA” stands for “printed circuit-board assembly.” Components described as a PCA might consist of a single circuit board or a circuit board plus other parts, such as cables and sensors.

Scanner assembly

Figure 8-1 Scanner assembly

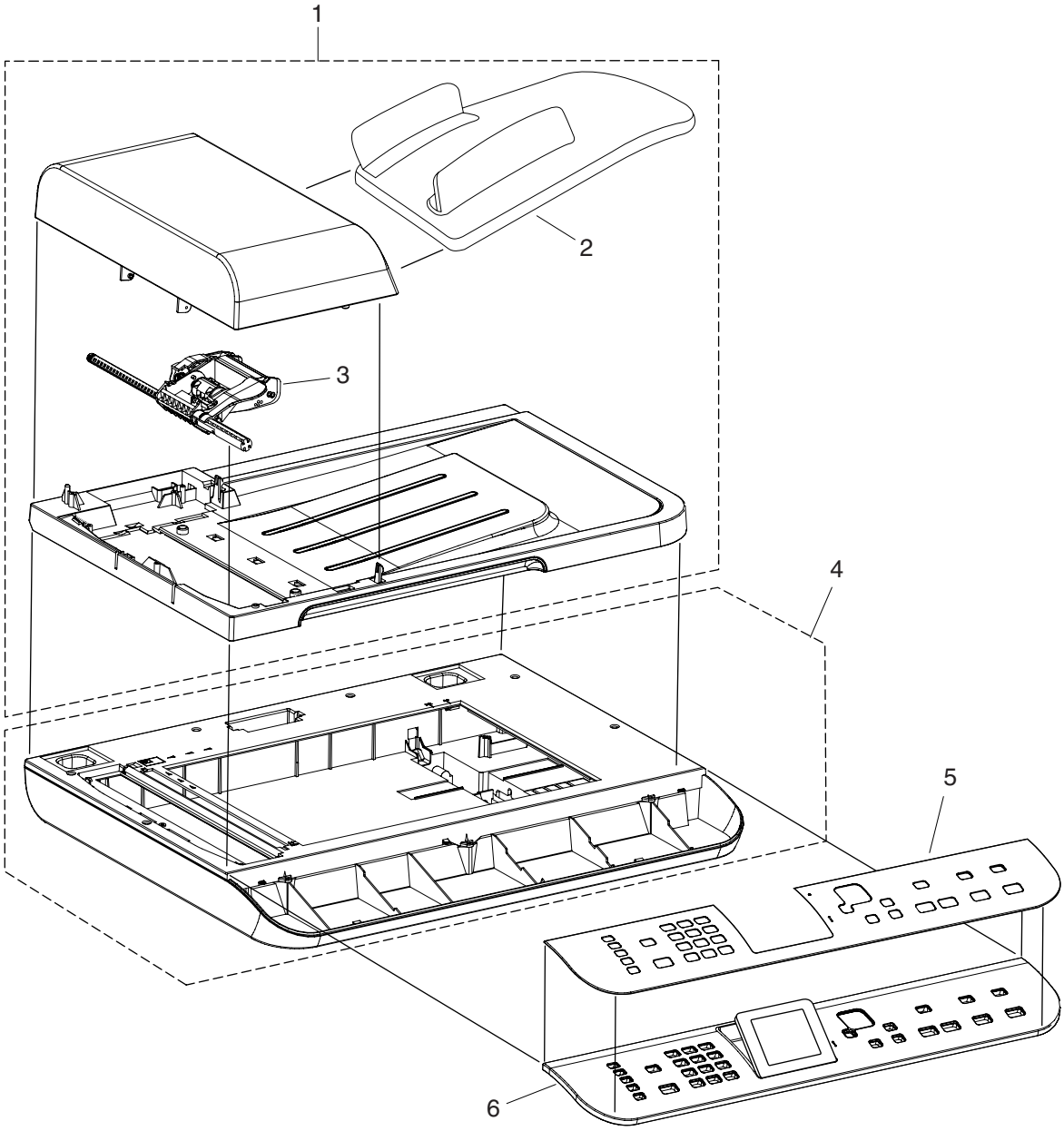

Table 8-4 Scanner assembly

Ref	Description	Part number	Qty
1	Automatic document feeder (ADF) assembly—simplex models	CC434-67902	1
1	Automatic document feeder (ADF) assembly—duplex models	CC436-67901	1
2	ADF input tray	CC431-60119	1
3	ADF pickup roller assembly	5851-3580	1
4	Scanner assembly, base	CC436-67903	1
	Scanner assembly, business/imaging	CC436-67902	1
5	Control-panel overlay, base model, English	CC434-60105	1
5	Control-panel overlay, base model, Spanish	CC434-00006	1
5	Control-panel overlay, base model, Portuguese	CC434-00007	1
5	Control-panel overlay, base model, German	CC434-00008	1
5	Control-panel overlay, base model, French	CC434-00009	1
5	Control-panel overlay, base model, Dutch	CC434-00010	1
5	Control-panel overlay, base model, Italian	CC434-00011	1
5	Control-panel overlay, base model, Swedish	CC434-00012	1
5	Control-panel overlay, base model, Norwegian	CC434-00013	1
5	Control-panel overlay, base model, Finnish	CC434-00014	1
5	Control-panel overlay, base model, Danish	CC434-00015	1
5	Control-panel overlay, base model, Russian	CC434-00016	1
5	Control-panel overlay, base model, Czech	CC434-00017	1
5	Control-panel overlay, base model, Hungarian	CC434-00018	1
5	Control-panel overlay, base model, Polish	CC434-00019	1
5	Control-panel overlay, base model, Slovak	CC434-00020	1
5	Control-panel overlay, base model, Turkish	CC434-00021	1
5	Control-panel overlay, base model, Greek	CC434-00022	1
5	Control-panel overlay, base model, Hebrew	CC434-00023	1
5	Control-panel overlay, base model, Arabic	CC434-00024	1
5	Control-panel overlay, base model, Chinese, traditional	CC434-00025	1
5	Control-panel overlay, base model, Korean	CC434-00026	1
5	Control-panel overlay, base model, Chinese, simplified	CC434-00027	1
5	Control-panel overlay, base model, Thai	CC434-00028	1
5	Control-panel overlay, base model, Vietnamese	CC434-00029	1
5	Control-panel bezel, fax model, English	CC436-40003	1
5	Control-panel bezel, fax model, Spanish	CC436-40004	1
5	Control-panel bezel, fax model, Portuguese	CC436-40005	1

Table 8-4 Scanner assembly (continued)

Ref	Description	Part number	Qty
5	Control-panel bezel, fax model, German	CC436-40006	1
5	Control-panel bezel, fax model, French	CC436-40007	1
5	Control-panel bezel, fax model, Dutch	CC436-40008	1
5	Control-panel bezel, fax model, Italian	CC436-40009	1
5	Control-panel bezel, fax model, Swedish	CC436-40010	1
5	Control-panel bezel, fax model, Norwegian	CC436-40011	1
5	Control-panel bezel, fax model, Finnish	CC436-40012	1
5	Control-panel bezel, fax model, Danish	CC436-40013	1
5	Control-panel bezel, fax model, Russian	CC436-40014	1
5	Control-panel bezel, fax model, Czech	CC436-40015	1
5	Control-panel bezel, fax model, Hungarian	CC436-40016	1
5	Control-panel bezel, fax model, Polish	CC436-40017	1
5	Control-panel bezel, fax model, Slovak	CC436-40018	1
5	Control-panel bezel, fax model, Turkish	CC436-40019	1
5	Control-panel bezel, fax model, Greek	CC436-40020	1
5	Control-panel bezel, fax model, Hebrew	CC436-40021	1
5	Control-panel bezel, fax model, Arabic	CC436-40022	1
5	Control-panel bezel, fax model, Chinese, traditional	CC436-40023	1
5	Control-panel bezel, fax model, Korean	CC436-40024	1
5	Control-panel bezel, fax model, Chinese, simplified	CC436-40025	1
5	Control-panel bezel, fax model, Thai	CC436-40026	1
5	Control-panel bezel, fax model, Vietnamese	CC436-40027	1
5	Control-panel bezel, memory-card model, English	CC431-40002	1
5	Control-panel bezel, memory-card model, Spanish	CC431-40003	1
5	Control-panel bezel, memory-card model, Portuguese	CC431-40004	1
5	Control-panel bezel, memory-card model, German	CC431-40005	1
5	Control-panel bezel, memory-card model, French	CC431-40006	1
5	Control-panel bezel, memory-card model, Dutch	CC431-40007	1
5	Control-panel bezel, memory-card model, Italian	CC431-40008	1
5	Control-panel bezel, memory-card model, Swedish	CC431-40009	1
5	Control-panel bezel, memory-card model, Norwegian	CC431-40010	1
5	Control-panel bezel, memory-card model, Finnish	CC431-40011	1
5	Control-panel bezel, memory-card model, Danish	CC431-40012	1
5	Control-panel bezel, memory-card model, Russian	CC431-40013	1
5	Control-panel bezel, memory-card model, Czech	CC431-40014	1

Table 8-4 Scanner assembly (continued)

Ref	Description	Part number	Qty
5	Control-panel bezel, memory-card model, Hungarian	CC431-40015	1
5	Control-panel bezel, memory-card model, Polish	CC431-40016	1
5	Control-panel bezel, memory-card model, Slovak	CC431-40017	1
5	Control-panel bezel, memory-card model, Turkish	CC431-40018	1
5	Control-panel bezel, memory-card model, Greek	CC431-40019	1
5	Control-panel bezel, memory-card model, Hebrew	CC431-40020	1
5	Control-panel bezel, memory-card model, Arabic	CC431-40021	1
5	Control-panel bezel, memory-card model, Chinese, traditional	CC431-40022	1
5	Control-panel bezel, memory-card model, Korean	CC431-40023	1
5	Control-panel bezel, memory-card model, Chinese, simplified	CC431-40024	1
5	Control-panel bezel, memory-card model, Thai	CC431-40025	1
5	Control-panel bezel, memory-card model, Vietnamese	CC431-40026	1
6	Control-panel assembly, Western, base model	CC434-60101	1
6	Control-panel assembly, Western, fax/memory-card models	CC431-60101	1
6	Control-panel assembly, Asian	CC434-60102	1

Assembly locations

Figure 8-2 Assembly locations

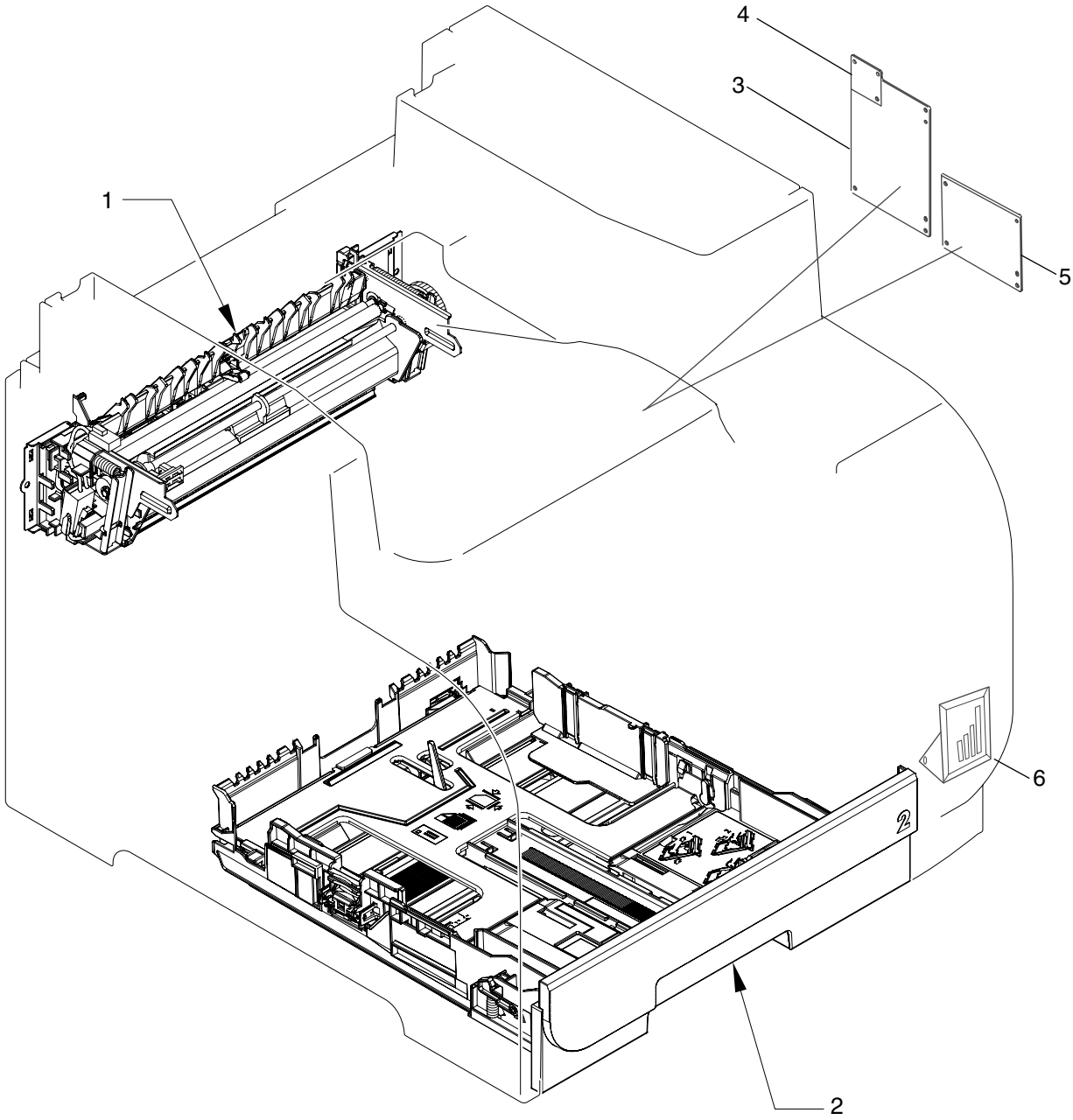

Table 8-5 Assembly locations

Ref	Description	Part number	Qty
1	Fuser assembly (110-127 V)	RM1-6740-000CN	1
1	Fuser assembly (220-240 V)	RM1-6741-000CN	1
2	Paper input cassette	RM1-4860-000CN	1
3	Formatter, fax models	CC400-67901	1
3	Formatter, business	CE684-67901	1
4	DAA (fax card), Americas/Asia (fax models only)	CC367-60001	1
4	DAA (fax card), Europe (fax models only)	CC514-60002	1
5	Formatter, base model	CC399-67901	1
6	Memory-card assembly (memory-card models only)	CC401-67901	1
	Formatter bracket, fax/memory-card models (not shown)	CC431-00002	1
	Formatter bracket, base models (not shown)	CC430-00027	1
	DAA flat flexible cable (not shown)	5851-3054	1
	Memory card cable guide (not shown)	CC435-40001	1
	Memory card bracket (not shown)	CC435-00001	1
	Fax insulator (not shown)	5851-3375	1
	Speaker (not shown)	Q3948-60113	1
	Core ferrite (not shown)	9170-2452	1
	Memory card cable (not shown)	5851-3055	1
	Blank bezel (not shown)	CC434-67901	1
	Memory card bezel (not shown)	CC435-67901	1

Covers

Figure 8-3 External panels and covers

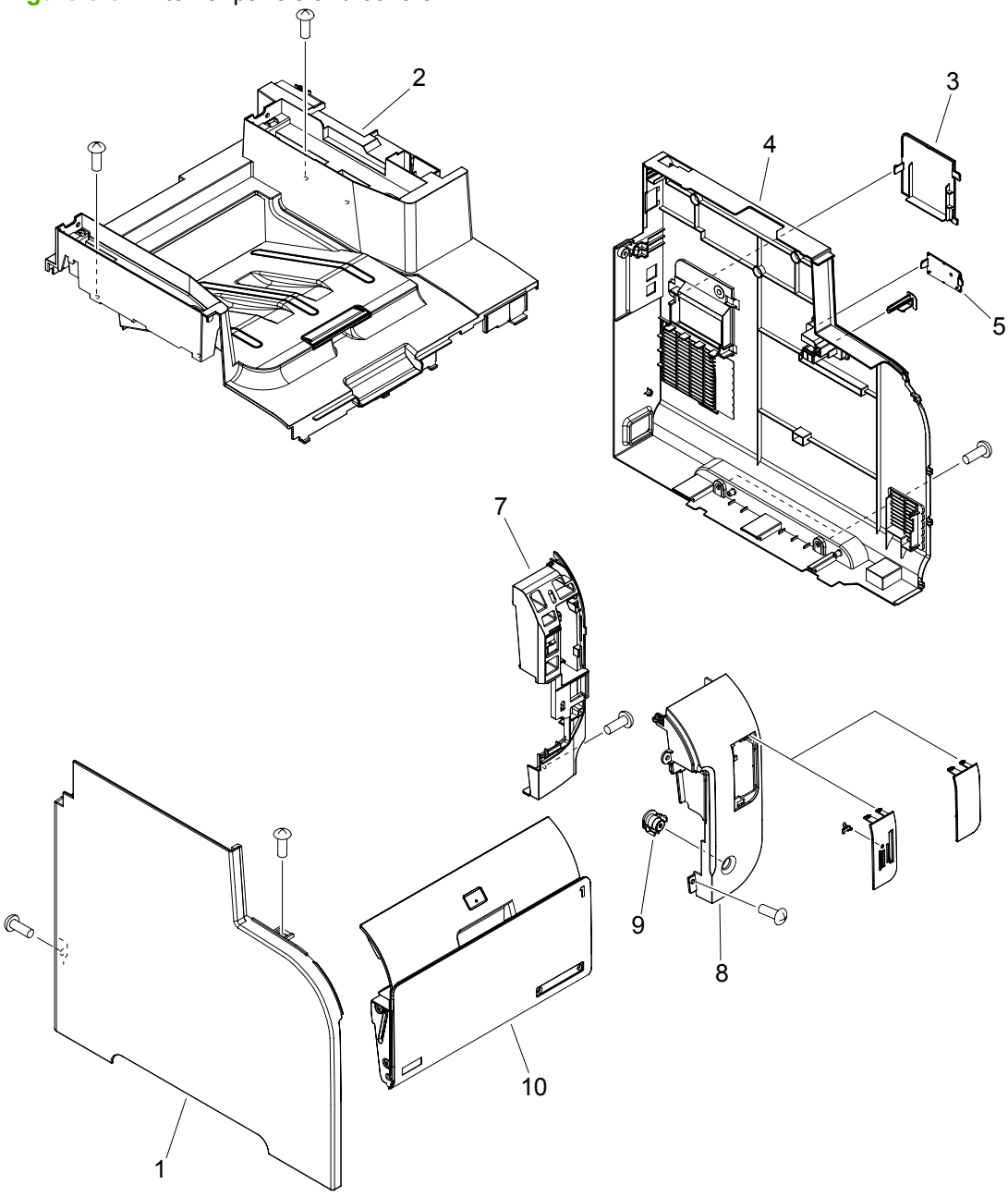

Table 8-6 External panels and covers

Ref	Description	Part number	Qty
1	Cover, left	RC2-3913-000CN	1
2	Upper cover assembly	RM1-4911-000CN	1
3	Cover, DIMM	RC2-3614-000CN	1
4	Cover, right	RC2-3912-000CN	1
5	Cover, IOT	RC2-3918-000CN	1
7	Cover, right front, lower	RC2-3915-000CN	1
8	Cover, right front	RC2-3914-000CN	1
9	Button, power	RC2-3612-000CN	1
10	Front door assembly	RM1-4848-000CN	1

Internal assemblies

Figure 8-4 Internal components (1 of 7)

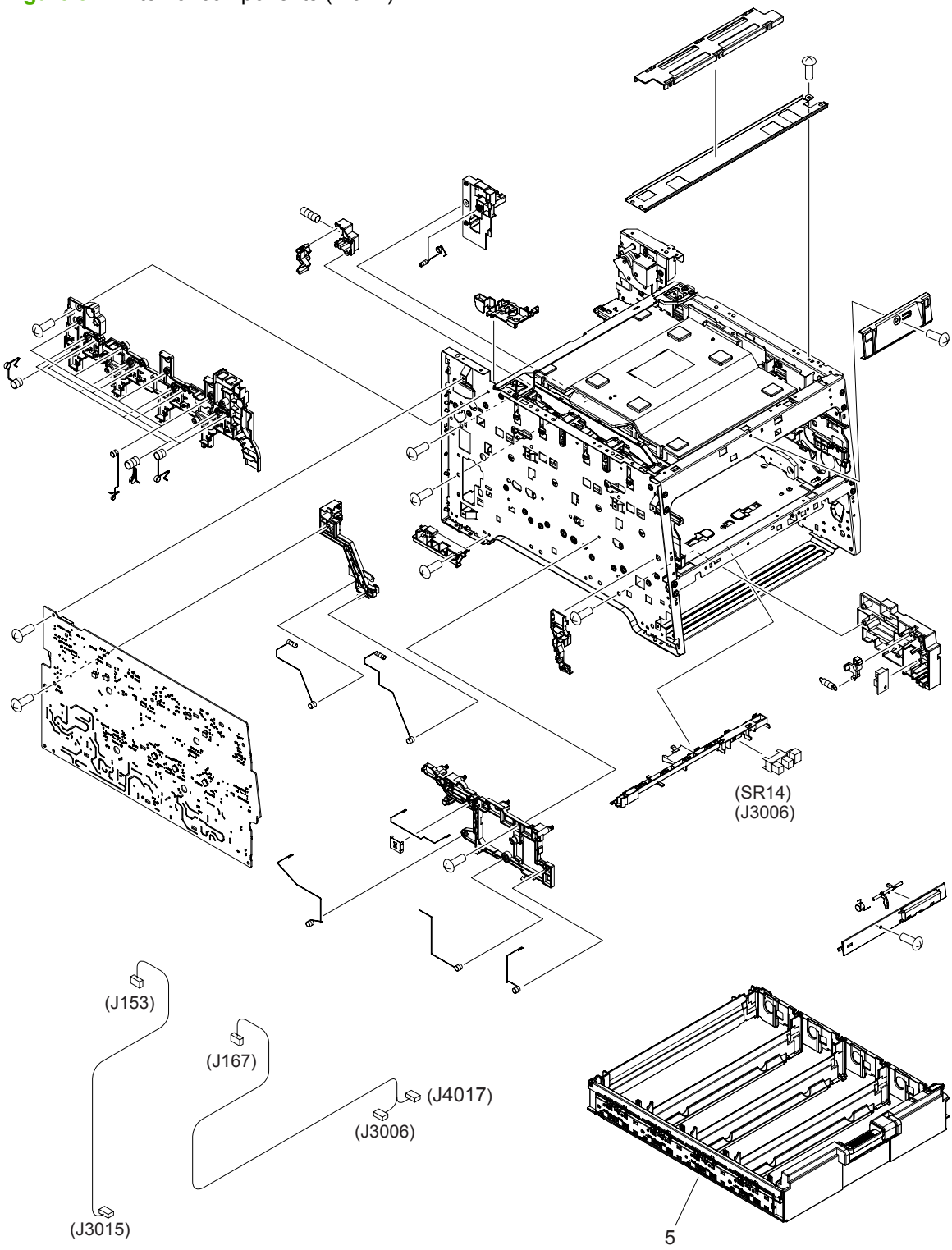

Table 8-7 Internal components (1 of 7)

Ref	Description	Part number	Qty
5	Cartridge tray assembly	RM1-4836-000CN	1

Figure 8-5 Internal components (2 of 7)

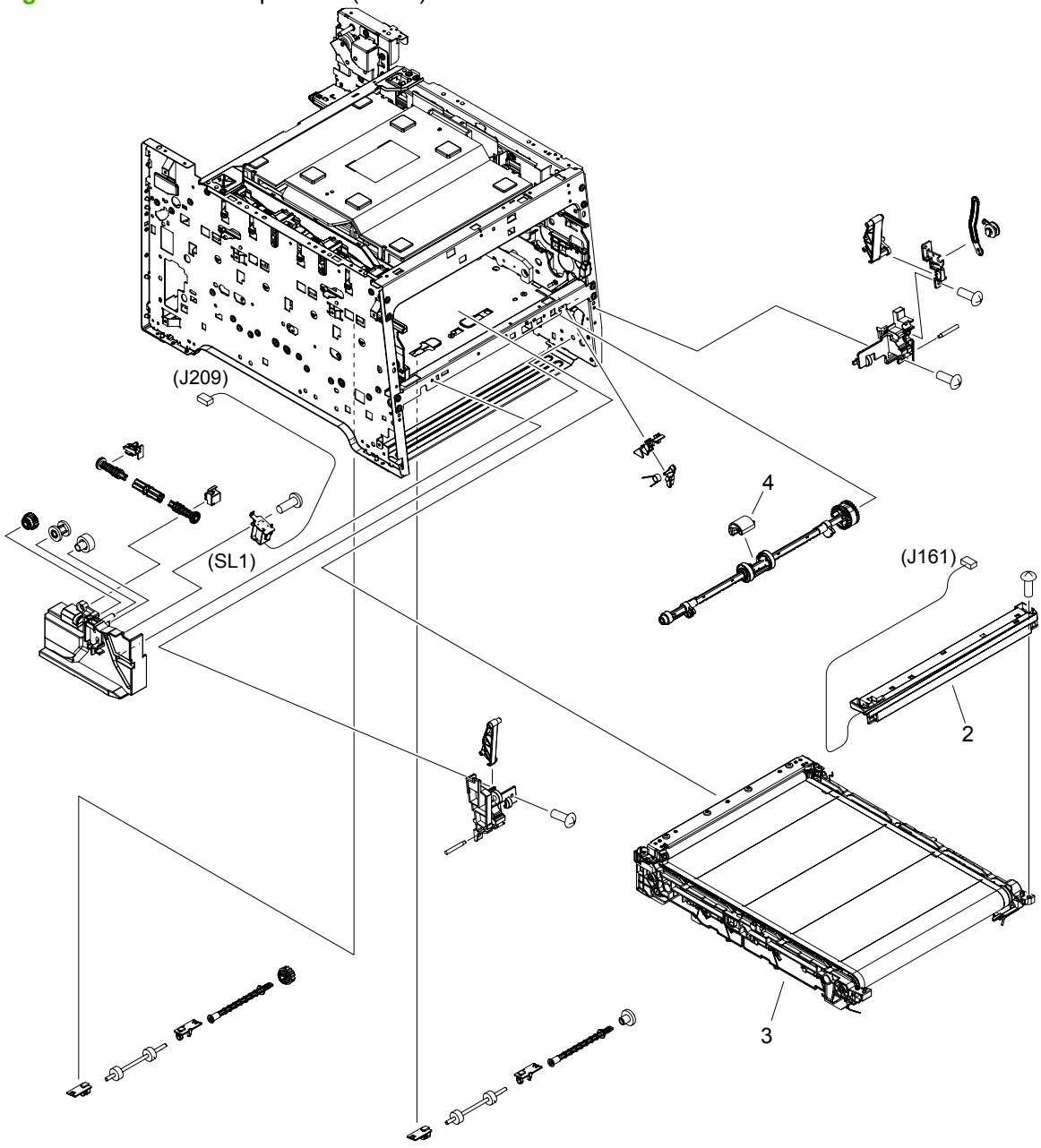

Table 8-8 Internal components (2 of 7)

Ref	Description	Part number	Qty
2	Color misregistration sensor assembly	RM1-4850-000CN	1
3	Intermediate transfer belt assembly	RM1-4852-000CN	1
4	Roller, paper pickup	RL1-1802-000CN	1

Figure 8-6 Internal components (3 of 7)

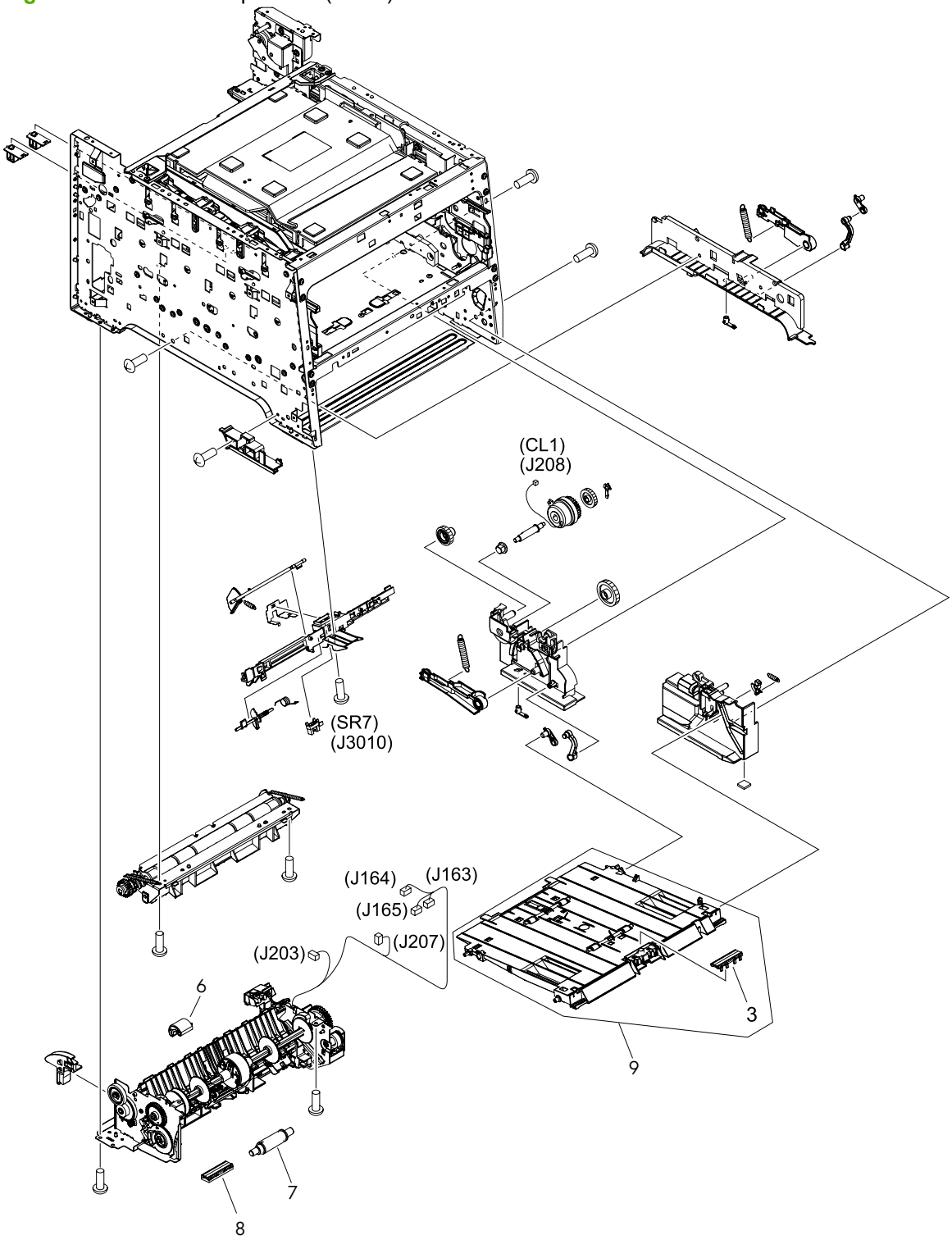

Table 8-9 Internal components (3 of 7)

Ref	Description	Part number	Qty
3	Pad, separation	RL1-1785-000CN	1
6	Pickup roller assembly	RM1-4426-000CN	1
7	Separation roller assembly	RM1-4840-000CN	1
8	Cover, holder	RC2-2014-000CN	1
9	MP paper pickup assembly (Tray 1)	RM1-4839-000CN	1

Figure 8-7 Internal components (4 of 7)

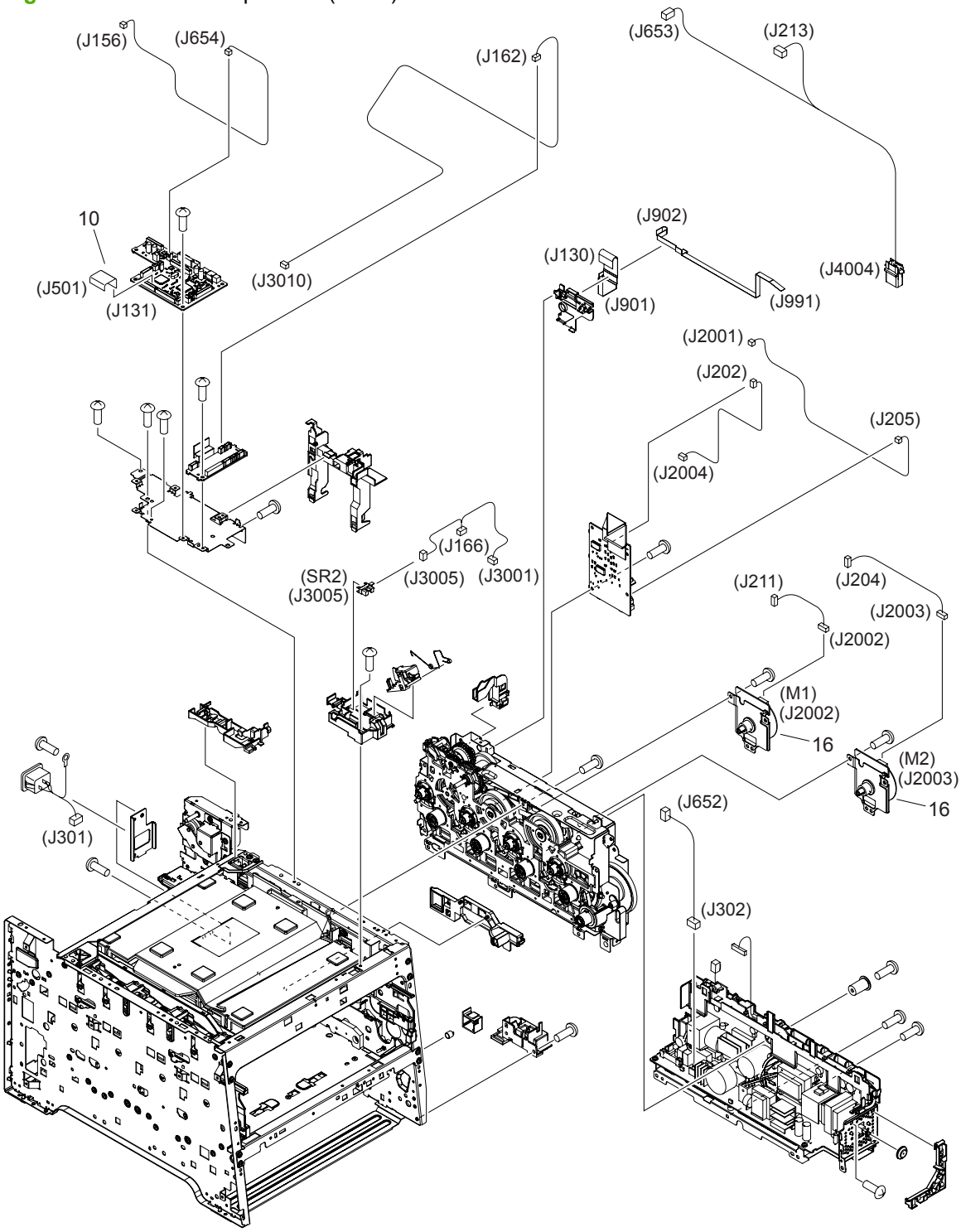

Table 8-10 Internal components (4 of 7)

Ref	Description	Part number	Qty
10	Cable, flat	RK2-2302-000CN	1
16	Motor, DC	RL1-1800-000CN	2

Figure 8-8 Internal components (5 of 7)

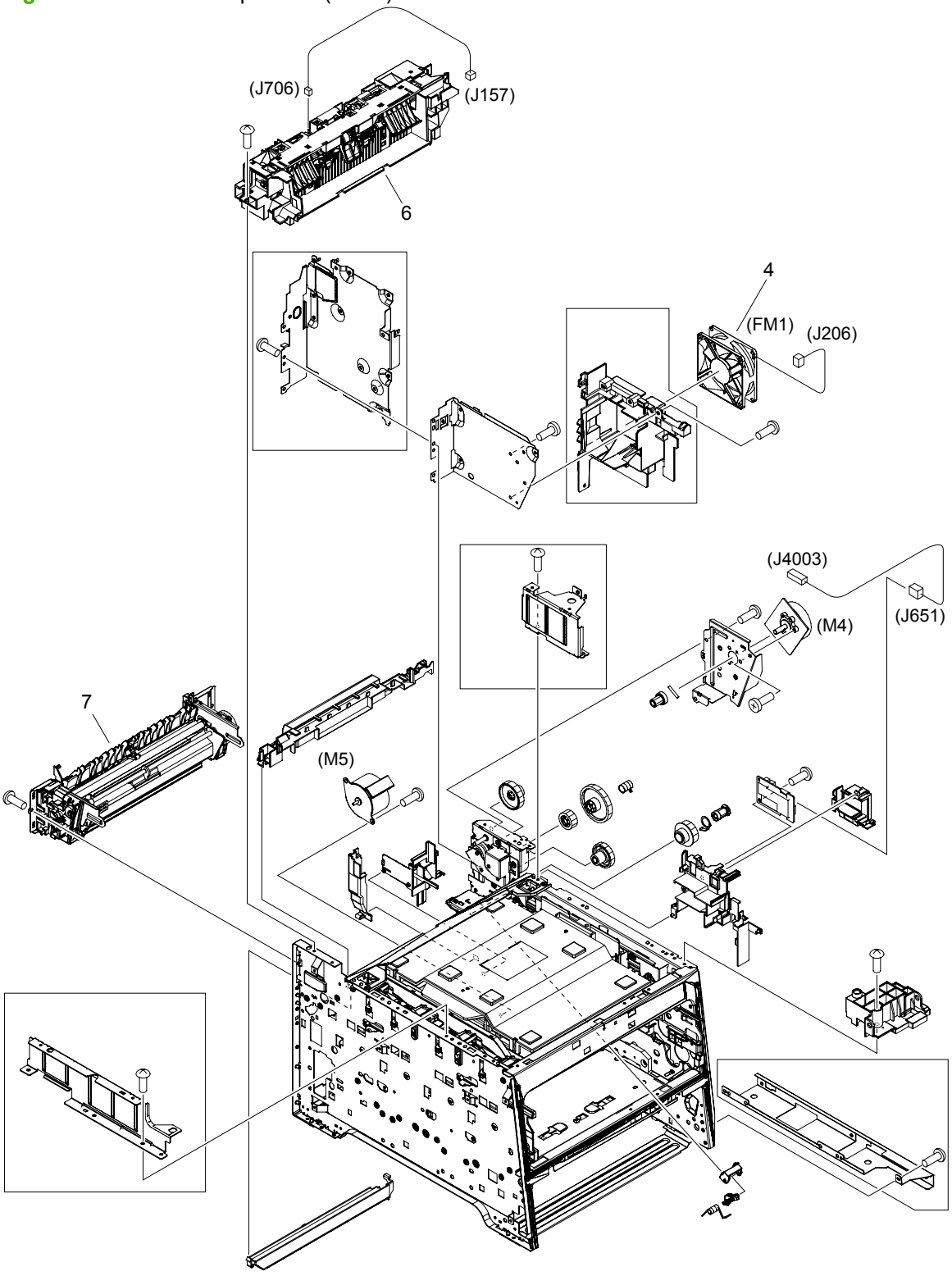

Table 8-11 Internal components (5 of 7)

Ref	Description	Part number	Qty
4	Fan	RK2-2276-000CN	1
6	Paper delivery assembly	RM1-4873-000CN	1
7	Fuser assembly (110-127 V)	RM1-6740-000CN	1
7	Fuser assembly (220-240 V)	RM1-6741-000CN	1

Figure 8-9 Internal components (6 of 7)—simplex models

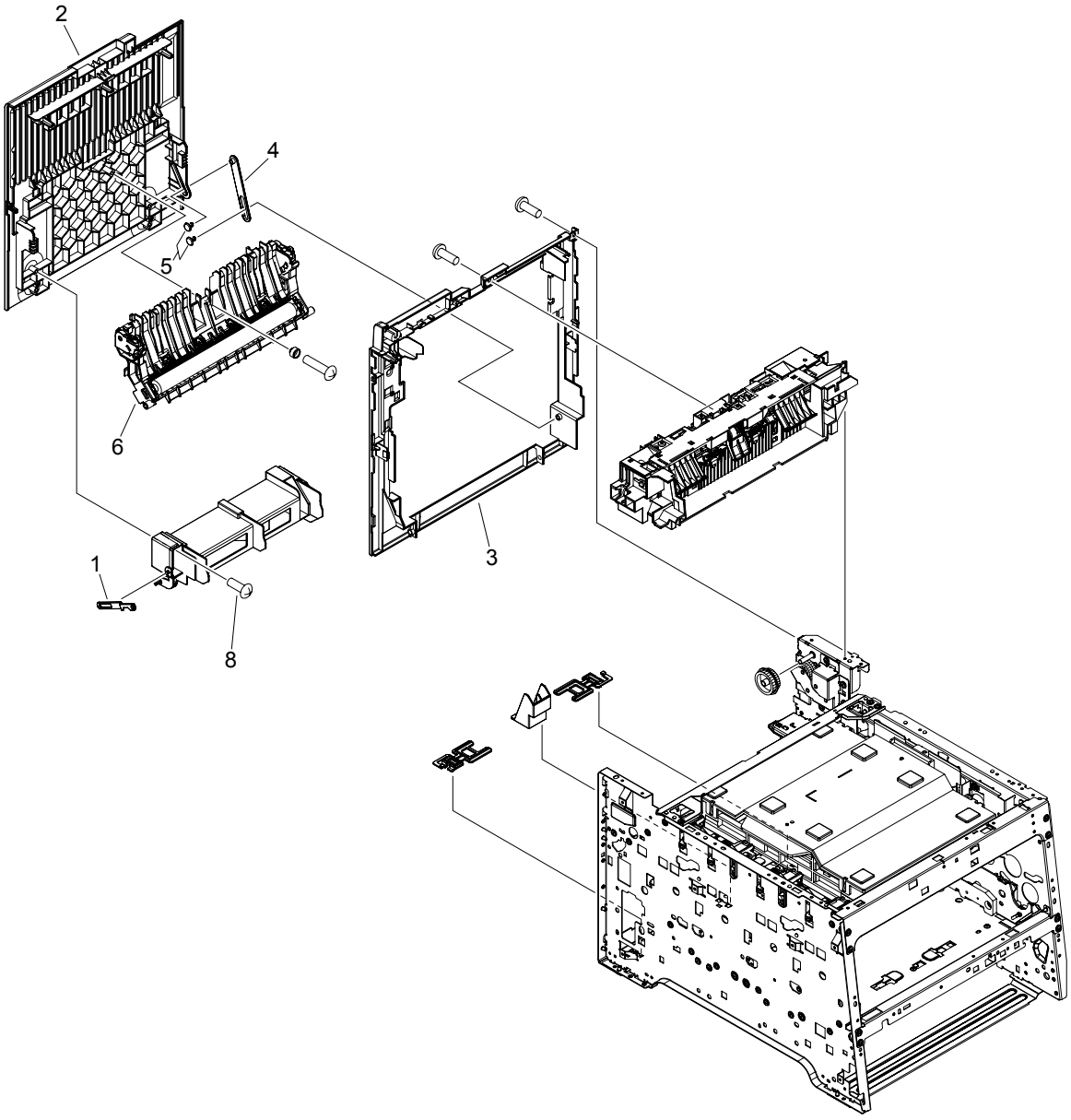

Table 8-12 Internal components (6 of 7)

Ref	Description	Part number	Qty
1	Link, guide[1]	Not orderable	1
2	Door, rear	RC2-3604-000CN	1
3	Cover, rear	RL1-1822-000CN	1
4	Stopper, door, rear	RC2-3598-000CN	1
5	Cap, link	RC2-3599-000CN	2
6	Paper feed guide assembly (simplex and duplex products)[2]	RM1-4838-000CN	1

[1] Depending on which end of the link-guide attachment point has failed, replace either the rear door, or the entire product (the interior paper guide is not replaceable).

[2] The paper-feed guide includes the transfer roller.

Figure 8-10 Internal components (7 of 7)—duplex models

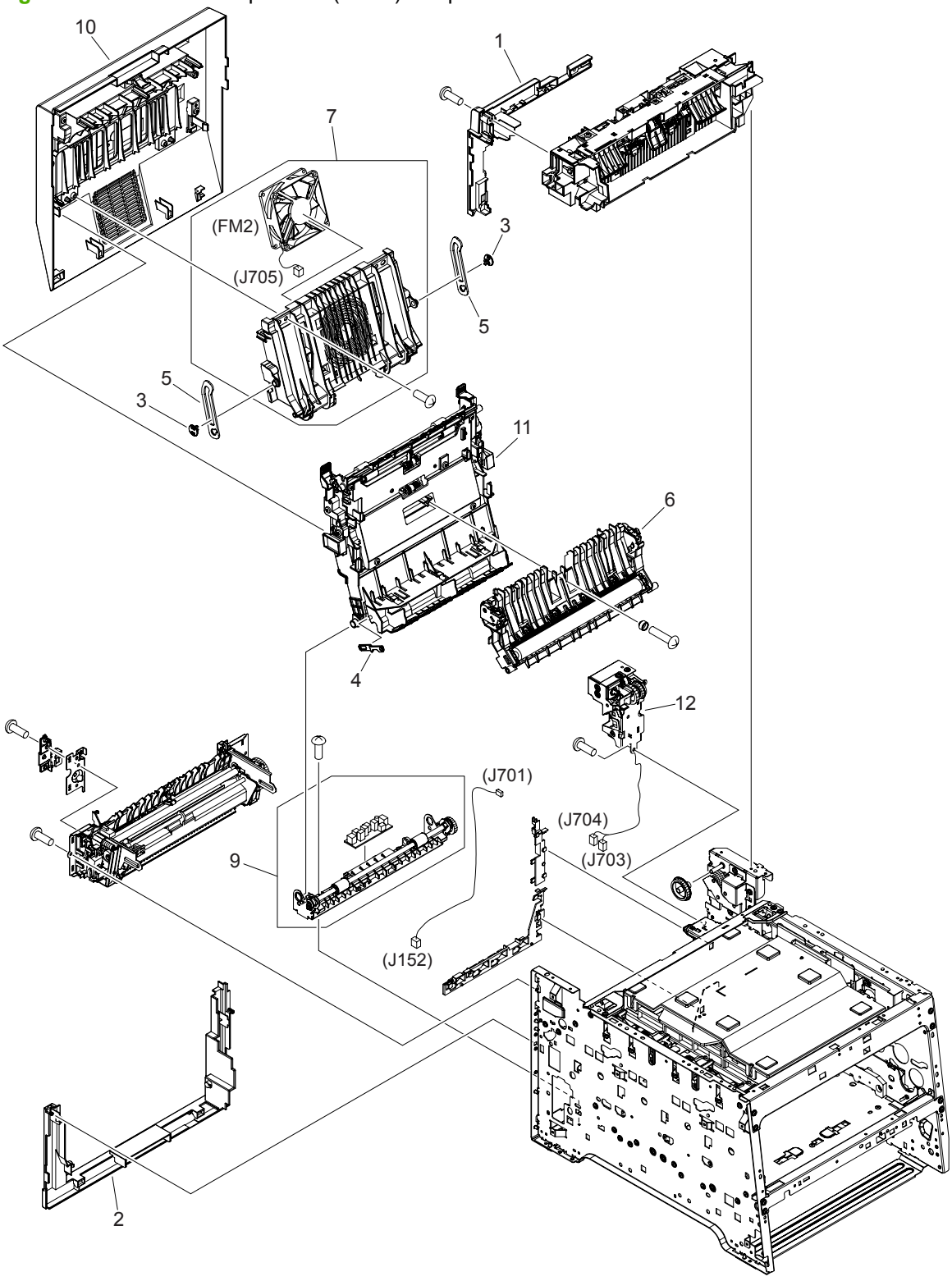

Table 8-13 Internal components (7 of 7)

Ref	Description	Part number	Qty
1	Cover, upper rear	RL1-1823-000CN	1
2	Cover, lower rear	RC2-3748-000CN	1
3	Cap, link	RC2-3774-000CN	2
4	Link, guide[1]	Not orderable	1
5	Link, door	RC2-3750-000CN	2
6	Paper feed guide assembly (simplex and duplex products)[2]	RM1-4838-000CN	1
7	Rear door rib assembly	RM1-4876-000CN	1
9	Paper re-pickup guide assembly	RM1-4877-000CN	1
10	Rear door assembly	RM1-4878-000CN	1
11	Duplexing-feed guide assembly	RM1-4879-000CN	1
12	Reverse drive assembly	RM1-4880-000CN	1

[1] Depending on which end of the link-guide attachment point has failed, replace either the duplexing-feed guide assembly, or the entire product (the interior paper guide is not replaceable).

[2] The paper-feed guide includes the transfer roller.

PCAs

Figure 8-11 PCA locations

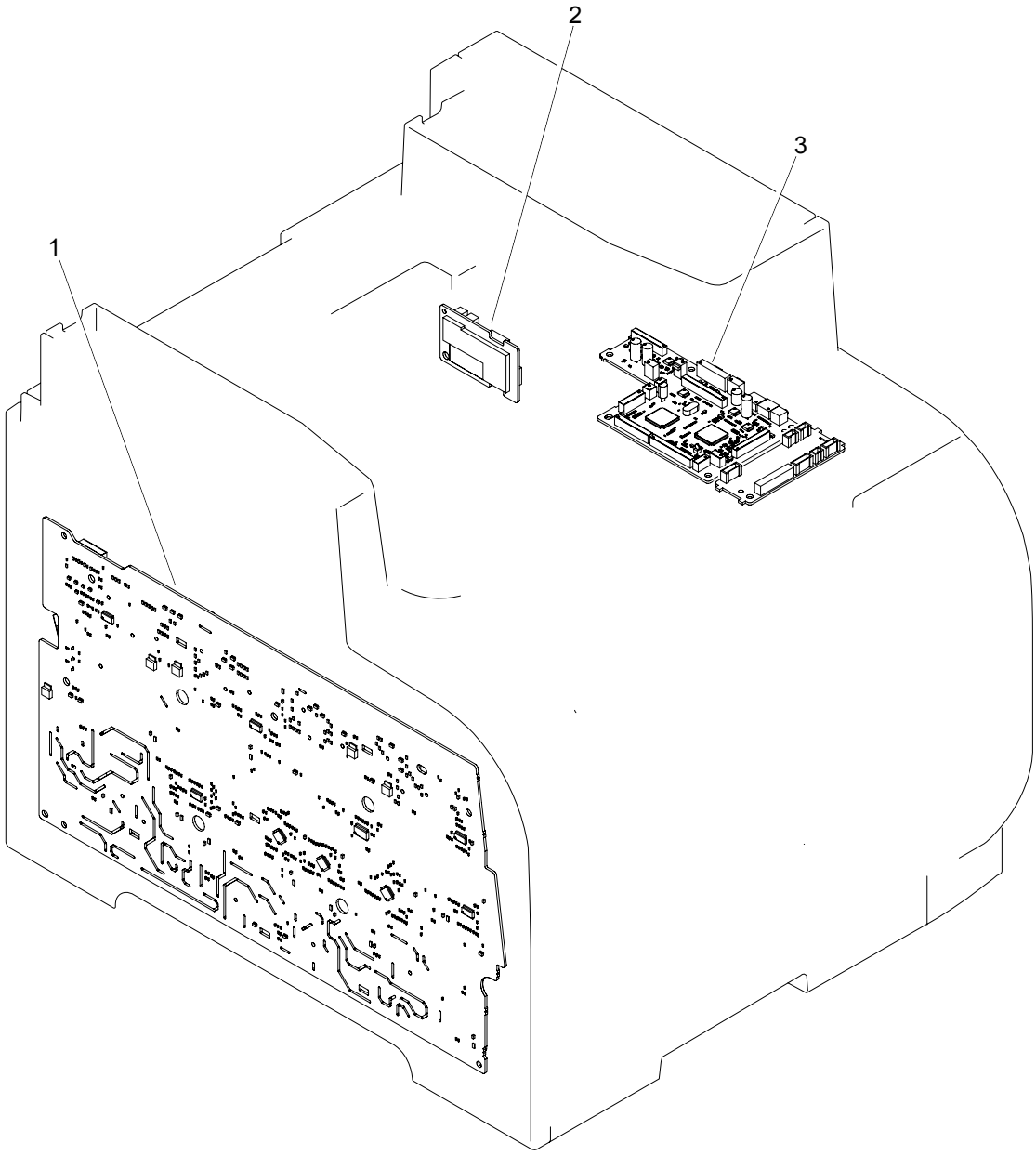

Table 8-14 PCA locations

Ref	Description	Part number	Qty
1	High-voltage power supply PCA	RM1-5294-000CN	1
2	Power supply sub PCA	RM1-5303-000CN	1
3	DC controller PCA	RM1-5431-000CN	1

Optional 250-sheet paper cassette

Figure 8-12 Optional 250-sheet paper cassette

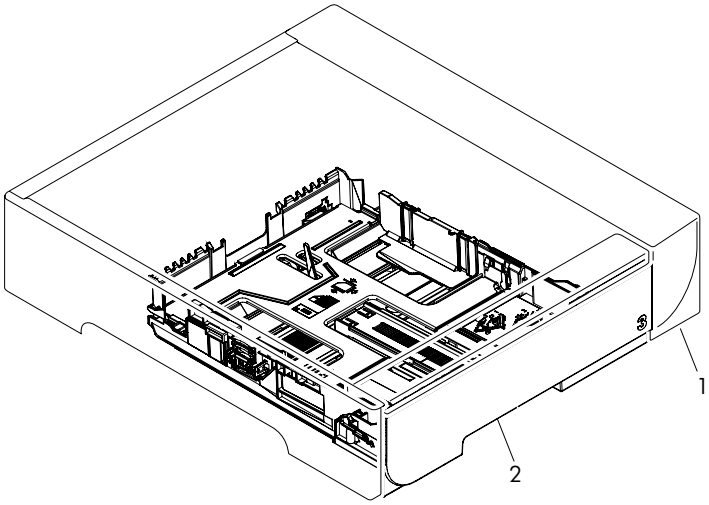

Table 8-15 250-sheet paper cassette

Ref	Description	Part number	Qty
1	Optional 250-sheet paper feeder (includes cassette)	CB500-67902	1
2	Optional 250-sheet paper cassette	RM1-4901-000CN	1

Alphabetical parts list

Table 8-16 Alphabetical parts list

Description	Part number	Table and page
ADF input tray	CC431-60119	Scanner assembly on page 333
ADF pickup roller assembly	5851-3580	Scanner assembly on page 333
Automatic document feeder (ADF) assembly—duplex models	CC436-67901	Scanner assembly on page 333
Automatic document feeder (ADF) assembly—simplex models	CC434-67902	Scanner assembly on page 333
Blank bezel (not shown)	CC434-67901	Assembly locations on page 337
Button, power	RC2-3612-000CN	External panels and covers on page 339
Cable, flat	RK2-2302-000CN	Internal components (4 of 7) on page 347
Cap, link	RC2-3599-000CN	Internal components (6 of 7) on page 351
Cap, link	RC2-3774-000CN	Internal components (7 of 7) on page 353
Cartridge tray assembly	RM1-4836-000CN	Internal components (1 of 7) on page 341
Color misregistration sensor assembly	RM1-4850-000CN	Internal components (2 of 7) on page 343
Control-panel assembly, Asian	CC434-60102	Scanner assembly on page 333
Control-panel assembly, Western, base model	CC434-60101	Scanner assembly on page 333
Control-panel assembly, Western, fax/memory-card models	CC431-60101	Scanner assembly on page 333
Control-panel bezel, fax model, Arabic	CC436-40022	Scanner assembly on page 333
Control-panel bezel, fax model, Chinese, simplified	CC436-40025	Scanner assembly on page 333
Control-panel bezel, fax model, Chinese, traditional	CC436-40023	Scanner assembly on page 333
Control-panel bezel, fax model, Czech	CC436-40015	Scanner assembly on page 333
Control-panel bezel, fax model, Danish	CC436-40013	Scanner assembly on page 333
Control-panel bezel, fax model, Dutch	CC436-40008	Scanner assembly on page 333
Control-panel bezel, fax model, English	CC436-40003	Scanner assembly on page 333

Table 8-16 Alphabetical parts list (continued)

Description	Part number	Table and page
Control-panel bezel, fax model, Finnish	CC436-40012	Scanner assembly on page 333
Control-panel bezel, fax model, French	CC436-40007	Scanner assembly on page 333
Control-panel bezel, fax model, German	CC436-40006	Scanner assembly on page 333
Control-panel bezel, fax model, Greek	CC436-40020	Scanner assembly on page 333
Control-panel bezel, fax model, Hebrew	CC436-40021	Scanner assembly on page 333
Control-panel bezel, fax model, Hungarian	CC436-40016	Scanner assembly on page 333
Control-panel bezel, fax model, Italian	CC436-40009	Scanner assembly on page 333
Control-panel bezel, fax model, Korean	CC436-40024	Scanner assembly on page 333
Control-panel bezel, fax model, Norwegian	CC436-40011	Scanner assembly on page 333
Control-panel bezel, fax model, Polish	CC436-40017	Scanner assembly on page 333
Control-panel bezel, fax model, Portuguese	CC436-40005	Scanner assembly on page 333
Control-panel bezel, fax model, Russian	CC436-40014	Scanner assembly on page 333
Control-panel bezel, fax model, Slovak	CC436-40018	Scanner assembly on page 333
Control-panel bezel, fax model, Spanish	CC436-40004	Scanner assembly on page 333
Control-panel bezel, fax model, Swedish	CC436-40010	Scanner assembly on page 333
Control-panel bezel, fax model, Thai	CC436-40026	Scanner assembly on page 333
Control-panel bezel, fax model, Turkish	CC436-40019	Scanner assembly on page 333
Control-panel bezel, fax model, Vietnamese	CC436-40027	Scanner assembly on page 333
Control-panel bezel, memory-card model, Arabic	CC431-40021	Scanner assembly on page 333
Control-panel bezel, memory-card model, Chinese, simplified	CC431-40024	Scanner assembly on page 333
Control-panel bezel, memory-card model, Chinese, traditional	CC431-40022	Scanner assembly on page 333
Control-panel bezel, memory-card model, Czech	CC431-40014	Scanner assembly on page 333

Table 8-16 Alphabetical parts list (continued)

Description	Part number	Table and page
Control-panel bezel, memory-card model, Danish	CC431-40012	Scanner assembly on page 333
Control-panel bezel, memory-card model, Dutch	CC431-40007	Scanner assembly on page 333
Control-panel bezel, memory-card model, English	CC431-40002	Scanner assembly on page 333
Control-panel bezel, memory-card model, Finnish	CC431-40011	Scanner assembly on page 333
Control-panel bezel, memory-card model, French	CC431-40006	Scanner assembly on page 333
Control-panel bezel, memory-card model, German	CC431-40005	Scanner assembly on page 333
Control-panel bezel, memory-card model, Greek	CC431-40019	Scanner assembly on page 333
Control-panel bezel, memory-card model, Hebrew	CC431-40020	Scanner assembly on page 333
Control-panel bezel, memory-card model, Hungarian	CC431-40015	Scanner assembly on page 333
Control-panel bezel, memory-card model, Italian	CC431-40008	Scanner assembly on page 333
Control-panel bezel, memory-card model, Korean	CC431-40023	Scanner assembly on page 333
Control-panel bezel, memory-card model, Norwegian	CC431-40010	Scanner assembly on page 333
Control-panel bezel, memory-card model, Polish	CC431-40016	Scanner assembly on page 333
Control-panel bezel, memory-card model, Portuguese	CC431-40004	Scanner assembly on page 333
Control-panel bezel, memory-card model, Russian	CC431-40013	Scanner assembly on page 333
Control-panel bezel, memory-card model, Slovak	CC431-40017	Scanner assembly on page 333
Control-panel bezel, memory-card model, Spanish	CC431-40003	Scanner assembly on page 333
Control-panel bezel, memory-card model, Swedish	CC431-40009	Scanner assembly on page 333
Control-panel bezel, memory-card model, Thai	CC431-40025	Scanner assembly on page 333
Control-panel bezel, memory-card model, Turkish	CC431-40018	Scanner assembly on page 333
Control-panel bezel, memory-card model, Vietnamese	CC431-40026	Scanner assembly on page 333
Control-panel overlay, base model, Arabic	CC434-00024	Scanner assembly on page 333

Table 8-16 Alphabetical parts list (continued)

Description	Part number	Table and page
Control-panel overlay, base model, Chinese, simplified	CC434-00027	Scanner assembly on page 333
Control-panel overlay, base model, Chinese, traditional	CC434-00025	Scanner assembly on page 333
Control-panel overlay, base model, Czech	CC434-00017	Scanner assembly on page 333
Control-panel overlay, base model, Danish	CC434-00015	Scanner assembly on page 333
Control-panel overlay, base model, Dutch	CC434-00010	Scanner assembly on page 333
Control-panel overlay, base model, English	CC434-60105	Scanner assembly on page 333
Control-panel overlay, base model, Finnish	CC434-00014	Scanner assembly on page 333
Control-panel overlay, base model, French	CC434-00009	Scanner assembly on page 333
Control-panel overlay, base model, German	CC434-00008	Scanner assembly on page 333
Control-panel overlay, base model, Greek	CC434-00022	Scanner assembly on page 333
Control-panel overlay, base model, Hebrew	CC434-00023	Scanner assembly on page 333
Control-panel overlay, base model, Hungarian	CC434-00018	Scanner assembly on page 333
Control-panel overlay, base model, Italian	CC434-00011	Scanner assembly on page 333
Control-panel overlay, base model, Korean	CC434-00026	Scanner assembly on page 333
Control-panel overlay, base model, Norwegian	CC434-00013	Scanner assembly on page 333
Control-panel overlay, base model, Polish	CC434-00019	Scanner assembly on page 333
Control-panel overlay, base model, Portuguese	CC434-00007	Scanner assembly on page 333
Control-panel overlay, base model, Russian	CC434-00016	Scanner assembly on page 333
Control-panel overlay, base model, Slovak	CC434-00020	Scanner assembly on page 333
Control-panel overlay, base model, Spanish	CC434-00006	Scanner assembly on page 333
Control-panel overlay, base model, Swedish	CC434-00012	Scanner assembly on page 333
Control-panel overlay, base model, Thai	CC434-00028	Scanner assembly on page 333

Table 8-16 Alphabetical parts list (continued)

Description	Part number	Table and page
Control-panel overlay, base model, Turkish	CC434-00021	Scanner assembly on page 333
Control-panel overlay, base model, Vietnamese	CC434-00029	Scanner assembly on page 333
Core ferrite (not shown)	9170-2452	Assembly locations on page 337
Cover, DIMM	RC2-3614-000CN	External panels and covers on page 339
Cover, holder	RC2-2014-000CN	Internal components (3 of 7) on page 345
Cover, IOT	RC2-3918-000CN	External panels and covers on page 339
Cover, left	RC2-3913-000CN	External panels and covers on page 339
Cover, lower rear	RC2-3748-000CN	Internal components (7 of 7) on page 353
Cover, rear	RL1-1822-000CN	Internal components (6 of 7) on page 351
Cover, right	RC2-3912-000CN	External panels and covers on page 339
Cover, right front	RC2-3914-000CN	External panels and covers on page 339
Cover, right front, lower	RC2-3915-000CN	External panels and covers on page 339
Cover, upper rear	RL1-1823-000CN	Internal components (7 of 7) on page 353
DAA (fax card), Americas/Asia (fax models only)	CC367-60001	Assembly locations on page 337
DAA (fax card), Europe (fax models only)	CC514-60002	Assembly locations on page 337
DAA flat flexible cable (not shown)	5851-3054	Assembly locations on page 337
DC controller PCA	RM1-5431-000CN	PCA locations on page 355
Door, rear	RC2-3604-000CN	Internal components (6 of 7) on page 351
Duplexing-feed guide assembly	RM1-4879-000CN	Internal components (7 of 7) on page 353
Fan	RK2-2276-000CN	Internal components (5 of 7) on page 349
Fax insulator (not shown)	5851-3375	Assembly locations on page 337
Formatter bracket, base models (not shown)	CC430-00027	Assembly locations on page 337

Table 8-16 Alphabetical parts list (continued)

Description	Part number	Table and page
Formatter bracket, fax/memory-card models (not shown)	CC431-00002	Assembly locations on page 337
Formatter, base model	CC399-67901	Assembly locations on page 337
Formatter, business	CE684-67901	Assembly locations on page 337
Formatter, fax models	CC400-67901	Assembly locations on page 337
Front door assembly	RM1-4848-000CN	External panels and covers on page 339
Fuser assembly (110-127 V)	RM1-6740-000CN	Assembly locations on page 337
Fuser assembly (110-127 V)	RM1-6740-000CN	Internal components (5 of 7) on page 349
Fuser assembly (220-240 V)	RM1-6741-000CN	Assembly locations on page 337
Fuser assembly (220-240 V)	RM1-6741-000CN	Internal components (5 of 7) on page 349
High-voltage power supply PCA	RM1-5294-000CN	PCA locations on page 355
Intermediate transfer belt assembly	RM1-4852-000CN	Internal components (2 of 7) on page 343
Link, door	RC2-3750-000CN	Internal components (7 of 7) on page 353
Link, guide[1]	Not orderable	Internal components (6 of 7) on page 351
Link, guide[1]	Not orderable	Internal components (7 of 7) on page 353
Memory card bezel (not shown)	CC435-67901	Assembly locations on page 337
Memory card bracket (not shown)	CC435-00001	Assembly locations on page 337
Memory card cable (not shown)	5851-3055	Assembly locations on page 337
Memory card cable guide (not shown)	CC435-40001	Assembly locations on page 337
Memory-card assembly (memory-card models only)	CC401-67901	Assembly locations on page 337
Motor, DC	RL1-1800-000CN	Internal components (4 of 7) on page 347
MP paper pickup assembly (Tray 1)	RM1-4839-000CN	Internal components (3 of 7) on page 345
Optional 250-sheet paper cassette	RM1-4901-000CN	250-sheet paper cassette on page 357

Table 8-16 Alphabetical parts list (continued)

Description	Part number	Table and page
Optional 250-sheet paper feeder (includes cassette)	CB500-67902	250-sheet paper cassette on page 357
Pad, separation	RL1-1785-000CN	Internal components (3 of 7) on page 345
Paper delivery assembly	RM1-4873-000CN	Internal components (5 of 7) on page 349
Paper feed guide assembly (simplex and duplex products)[2]	RM1-4838-000CN	Internal components (6 of 7) on page 351
Paper feed guide assembly (simplex and duplex products)[2]	RM1-4838-000CN	Internal components (7 of 7) on page 353
Paper input cassette	RM1-4860-000CN	Assembly locations on page 337
Paper re-pickup guide assembly	RM1-4877-000CN	Internal components (7 of 7) on page 353
Pickup roller assembly	RM1-4426-000CN	Internal components (3 of 7) on page 345
Power supply sub PCA	RM1-5303-000CN	PCA locations on page 355
Rear door assembly	RM1-4878-000CN	Internal components (7 of 7) on page 353
Rear door rib assembly	RM1-4876-000CN	Internal components (7 of 7) on page 353
Reverse drive assembly	RM1-4880-000CN	Internal components (7 of 7) on page 353
Roller, paper pickup	RL1-1802-000CN	Internal components (2 of 7) on page 343
Scanner assembly, base	CC436-67903	Scanner assembly on page 333
Scanner assembly, business/imaging	CC436-67902	Scanner assembly on page 333
Separation roller assembly	RM1-4840-000CN	Internal components (3 of 7) on page 345
Speaker (not shown)	Q3948-60113	Assembly locations on page 337
Stopper, door, rear	RC2-3598-000CN	Internal components (6 of 7) on page 351
Upper cover assembly	RM1-4911-000CN	External panels and covers on page 339

Numerical parts list

Table 8-17 Numerical parts list

Part number	Description	Table and page
5851-3054	DAA flat flexible cable (not shown)	Assembly locations on page 337
5851-3055	Memory card cable (not shown)	Assembly locations on page 337
5851-3375	Fax insulator (not shown)	Assembly locations on page 337
5851-3580	ADF pickup roller assembly	Scanner assembly on page 333
9170-2452	Core ferrite (not shown)	Assembly locations on page 337
CB500-67902	Optional 250-sheet paper feeder (includes cassette)	250-sheet paper cassette on page 357
CC367-60001	DAA (fax card), Americas/Asia (fax models only)	Assembly locations on page 337
CC399-67901	Formatter, base model	Assembly locations on page 337
CC400-67901	Formatter, fax models	Assembly locations on page 337
CC401-67901	Memory-card assembly (memory-card models only)	Assembly locations on page 337
CC430-00027	Formatter bracket, base models (not shown)	Assembly locations on page 337
CC431-00002	Formatter bracket, fax/memory-card models (not shown)	Assembly locations on page 337
CC431-40002	Control-panel bezel, memory-card model, English	Scanner assembly on page 333
CC431-40003	Control-panel bezel, memory-card model, Spanish	Scanner assembly on page 333
CC431-40004	Control-panel bezel, memory-card model, Portuguese	Scanner assembly on page 333
CC431-40005	Control-panel bezel, memory-card model, German	Scanner assembly on page 333
CC431-40006	Control-panel bezel, memory-card model, French	Scanner assembly on page 333
CC431-40007	Control-panel bezel, memory-card model, Dutch	Scanner assembly on page 333
CC431-40008	Control-panel bezel, memory-card model, Italian	Scanner assembly on page 333
CC431-40009	Control-panel bezel, memory-card model, Swedish	Scanner assembly on page 333
CC431-40010	Control-panel bezel, memory-card model, Norwegian	Scanner assembly on page 333

Table 8-17 Numerical parts list (continued)

Part number	Description	Table and page
CC431-40011	Control-panel bezel, memory-card model, Finnish	Scanner assembly on page 333
CC431-40012	Control-panel bezel, memory-card model, Danish	Scanner assembly on page 333
CC431-40013	Control-panel bezel, memory-card model, Russian	Scanner assembly on page 333
CC431-40014	Control-panel bezel, memory-card model, Czech	Scanner assembly on page 333
CC431-40015	Control-panel bezel, memory-card model, Hungarian	Scanner assembly on page 333
CC431-40016	Control-panel bezel, memory-card model, Polish	Scanner assembly on page 333
CC431-40017	Control-panel bezel, memory-card model, Slovak	Scanner assembly on page 333
CC431-40018	Control-panel bezel, memory-card model, Turkish	Scanner assembly on page 333
CC431-40019	Control-panel bezel, memory-card model, Greek	Scanner assembly on page 333
CC431-40020	Control-panel bezel, memory-card model, Hebrew	Scanner assembly on page 333
CC431-40021	Control-panel bezel, memory-card model, Arabic	Scanner assembly on page 333
CC431-40022	Control-panel bezel, memory-card model, Chinese, traditional	Scanner assembly on page 333
CC431-40023	Control-panel bezel, memory-card model, Korean	Scanner assembly on page 333
CC431-40024	Control-panel bezel, memory-card model, Chinese, simplified	Scanner assembly on page 333
CC431-40025	Control-panel bezel, memory-card model, Thai	Scanner assembly on page 333
CC431-40026	Control-panel bezel, memory-card model, Vietnamese	Scanner assembly on page 333
CC431-60101	Control-panel assembly, Western, fax/memory-card models	Scanner assembly on page 333
CC431-60119	ADF input tray	Scanner assembly on page 333
CC434-00006	Control-panel overlay, base model, Spanish	Scanner assembly on page 333
CC434-00007	Control-panel overlay, base model, Portuguese	Scanner assembly on page 333
CC434-00008	Control-panel overlay, base model, German	Scanner assembly on page 333
CC434-00009	Control-panel overlay, base model, French	Scanner assembly on page 333

Table 8-17 Numerical parts list (continued)

Part number	Description	Table and page
CC434-00010	Control-panel overlay, base model, Dutch	Scanner assembly on page 333
CC434-00011	Control-panel overlay, base model, Italian	Scanner assembly on page 333
CC434-00012	Control-panel overlay, base model, Swedish	Scanner assembly on page 333
CC434-00013	Control-panel overlay, base model, Norwegian	Scanner assembly on page 333
CC434-00014	Control-panel overlay, base model, Finnish	Scanner assembly on page 333
CC434-00015	Control-panel overlay, base model, Danish	Scanner assembly on page 333
CC434-00016	Control-panel overlay, base model, Russian	Scanner assembly on page 333
CC434-00017	Control-panel overlay, base model, Czech	Scanner assembly on page 333
CC434-00018	Control-panel overlay, base model, Hungarian	Scanner assembly on page 333
CC434-00019	Control-panel overlay, base model, Polish	Scanner assembly on page 333
CC434-00020	Control-panel overlay, base model, Slovak	Scanner assembly on page 333
CC434-00021	Control-panel overlay, base model, Turkish	Scanner assembly on page 333
CC434-00022	Control-panel overlay, base model, Greek	Scanner assembly on page 333
CC434-00023	Control-panel overlay, base model, Hebrew	Scanner assembly on page 333
CC434-00024	Control-panel overlay, base model, Arabic	Scanner assembly on page 333
CC434-00025	Control-panel overlay, base model, Chinese, traditional	Scanner assembly on page 333
CC434-00026	Control-panel overlay, base model, Korean	Scanner assembly on page 333
CC434-00027	Control-panel overlay, base model, Chinese, simplified	Scanner assembly on page 333
CC434-00028	Control-panel overlay, base model, Thai	Scanner assembly on page 333
CC434-00029	Control-panel overlay, base model, Vietnamese	Scanner assembly on page 333
CC434-60101	Control-panel assembly, Western, base model	Scanner assembly on page 333
CC434-60102	Control-panel assembly, Asian	Scanner assembly on page 333

Table 8-17 Numerical parts list (continued)

Part number	Description	Table and page
CC434-60105	Control-panel overlay, base model, English	Scanner assembly on page 333
CC434-67901	Blank bezel (not shown)	Assembly locations on page 337
CC434-67902	Automatic document feeder (ADF) assembly—simplex models	Scanner assembly on page 333
CC435-00001	Memory card bracket (not shown)	Assembly locations on page 337
CC435-40001	Memory card cable guide (not shown)	Assembly locations on page 337
CC435-67901	Memory card bezel (not shown)	Assembly locations on page 337
CC436-40003	Control-panel bezel, fax model, English	Scanner assembly on page 333
CC436-40004	Control-panel bezel, fax model, Spanish	Scanner assembly on page 333
CC436-40005	Control-panel bezel, fax model, Portuguese	Scanner assembly on page 333
CC436-40006	Control-panel bezel, fax model, German	Scanner assembly on page 333
CC436-40007	Control-panel bezel, fax model, French	Scanner assembly on page 333
CC436-40008	Control-panel bezel, fax model, Dutch	Scanner assembly on page 333
CC436-40009	Control-panel bezel, fax model, Italian	Scanner assembly on page 333
CC436-40010	Control-panel bezel, fax model, Swedish	Scanner assembly on page 333
CC436-40011	Control-panel bezel, fax model, Norwegian	Scanner assembly on page 333
CC436-40012	Control-panel bezel, fax model, Finnish	Scanner assembly on page 333
CC436-40013	Control-panel bezel, fax model, Danish	Scanner assembly on page 333
CC436-40014	Control-panel bezel, fax model, Russian	Scanner assembly on page 333
CC436-40015	Control-panel bezel, fax model, Czech	Scanner assembly on page 333
CC436-40016	Control-panel bezel, fax model, Hungarian	Scanner assembly on page 333
CC436-40017	Control-panel bezel, fax model, Polish	Scanner assembly on page 333
CC436-40018	Control-panel bezel, fax model, Slovak	Scanner assembly on page 333

Table 8-17 Numerical parts list (continued)

Part number	Description	Table and page
CC436-40019	Control-panel bezel, fax model, Turkish	Scanner assembly on page 333
CC436-40020	Control-panel bezel, fax model, Greek	Scanner assembly on page 333
CC436-40021	Control-panel bezel, fax model, Hebrew	Scanner assembly on page 333
CC436-40022	Control-panel bezel, fax model, Arabic	Scanner assembly on page 333
CC436-40023	Control-panel bezel, fax model, Chinese, traditional	Scanner assembly on page 333
CC436-40024	Control-panel bezel, fax model, Korean	Scanner assembly on page 333
CC436-40025	Control-panel bezel, fax model, Chinese, simplified	Scanner assembly on page 333
CC436-40026	Control-panel bezel, fax model, Thai	Scanner assembly on page 333
CC436-40027	Control-panel bezel, fax model, Vietnamese	Scanner assembly on page 333
CC436-67901	Automatic document feeder (ADF) assembly—duplex models	Scanner assembly on page 333
CC436-67902	Scanner assembly, business/imaging	Scanner assembly on page 333
CC436-67903	Scanner assembly, base	Scanner assembly on page 333
CC514-60002	DAA (fax card), Europe (fax models only)	Assembly locations on page 337
CE684-67901	Formatter, business	Assembly locations on page 337
Not orderable	Link, guide[1]	Internal components (6 of 7) on page 351
Not orderable	Link, guide[1]	Internal components (7 of 7) on page 353
Q3948-60113	Speaker (not shown)	Assembly locations on page 337
RC2-2014-000CN	Cover, holder	Internal components (3 of 7) on page 345
RC2-3598-000CN	Stopper, door, rear	Internal components (6 of 7) on page 351
RC2-3599-000CN	Cap, link	Internal components (6 of 7) on page 351
RC2-3604-000CN	Door, rear	Internal components (6 of 7) on page 351
RC2-3612-000CN	Button, power	External panels and covers on page 339

Table 8-17 Numerical parts list (continued)

Part number	Description	Table and page
RC2-3614-000CN	Cover, DIMM	External panels and covers on page 339
RC2-3748-000CN	Cover, lower rear	Internal components (7 of 7) on page 353
RC2-3750-000CN	Link, door	Internal components (7 of 7) on page 353
RC2-3774-000CN	Cap, link	Internal components (7 of 7) on page 353
RC2-3912-000CN	Cover, right	External panels and covers on page 339
RC2-3913-000CN	Cover, left	External panels and covers on page 339
RC2-3914-000CN	Cover, right front	External panels and covers on page 339
RC2-3915-000CN	Cover, right front, lower	External panels and covers on page 339
RC2-3918-000CN	Cover, IOT	External panels and covers on page 339
RK2-2276-000CN	Fan	Internal components (5 of 7) on page 349
RK2-2302-000CN	Cable, flat	Internal components (4 of 7) on page 347
RL1-1785-000CN	Pad, separation	Internal components (3 of 7) on page 345
RL1-1800-000CN	Motor, DC	Internal components (4 of 7) on page 347
RL1-1802-000CN	Roller, paper pickup	Internal components (2 of 7) on page 343
RL1-1822-000CN	Cover, rear	Internal components (6 of 7) on page 351
RL1-1823-000CN	Cover, upper rear	Internal components (7 of 7) on page 353
RM1-4426-000CN	Pickup roller assembly	Internal components (3 of 7) on page 345
RM1-4836-000CN	Cartridge tray assembly	Internal components (1 of 7) on page 341
RM1-4838-000CN	Paper feed guide assembly (simplex and duplex products)[2]	Internal components (6 of 7) on page 351
RM1-4838-000CN	Paper feed guide assembly (simplex and duplex products)[2]	Internal components (7 of 7) on page 353
RM1-4839-000CN	MP paper pickup assembly (Tray 1)	Internal components (3 of 7) on page 345
RM1-4840-000CN	Separation roller assembly	Internal components (3 of 7) on page 345

Table 8-17 Numerical parts list (continued)

Part number	Description	Table and page
RM1-4848-000CN	Front door assembly	External panels and covers on page 339
RM1-4850-000CN	Color misregistration sensor assembly	Internal components (2 of 7) on page 343
RM1-4852-000CN	Intermediate transfer belt assembly	Internal components (2 of 7) on page 343
RM1-4860-000CN	Paper input cassette	Assembly locations on page 337
RM1-4873-000CN	Paper delivery assembly	Internal components (5 of 7) on page 349
RM1-4876-000CN	Rear door rib assembly	Internal components (7 of 7) on page 353
RM1-4877-000CN	Paper re-pickup guide assembly	Internal components (7 of 7) on page 353
RM1-4878-000CN	Rear door assembly	Internal components (7 of 7) on page 353
RM1-4879-000CN	Duplexing-feed guide assembly	Internal components (7 of 7) on page 353
RM1-4880-000CN	Reverse drive assembly	Internal components (7 of 7) on page 353
RM1-4901-000CN	Optional 250-sheet paper cassette	250-sheet paper cassette on page 357
RM1-4911-000CN	Upper cover assembly	External panels and covers on page 339
RM1-5294-000CN	High-voltage power supply PCA	PCA locations on page 355
RM1-5303-000CN	Power supply sub PCA	PCA locations on page 355
RM1-5431-000CN	DC controller PCA	PCA locations on page 355
RM1-6740-000CN	Fuser assembly (110-127 V)	Assembly locations on page 337
RM1-6740-000CN	Fuser assembly (110-127 V)	Internal components (5 of 7) on page 349
RM1-6741-000CN	Fuser assembly (220-240 V)	Assembly locations on page 337
RM1-6741-000CN	Fuser assembly (220-240 V)	Internal components (5 of 7) on page 349

A Service and support

Hewlett-Packard limited warranty statement

HP PRODUCT	DURATION OF LIMITED WARRANTY
HP Color LaserJet CM2320, CM2320nf, and CM2320fxi	One-year limited warranty

HP warrants to you, the end-user customer, that HP hardware and accessories will be free from defects in materials and workmanship after the date of purchase, for the period specified above. If HP receives notice of such defects during the warranty period, HP will, at its option, either repair or replace products which prove to be defective. Replacement products may be either new or equivalent in performance to new.

HP warrants to you that HP software will not fail to execute its programming instructions after the date of purchase, for the period specified above, due to defects in material and workmanship when properly installed and used. If HP receives notice of such defects during the warranty period, HP will replace software which does not execute its programming instructions due to such defects.

HP does not warrant that the operation of HP products will be uninterrupted or error free. If HP is unable, within a reasonable time, to repair or replace any product to a condition as warranted, you will be entitled to a refund of the purchase price upon prompt return of the product.

HP products may contain remanufactured parts equivalent to new in performance or may have been subject to incidental use.

Warranty does not apply to defects resulting from (a) improper or inadequate maintenance or calibration, (b) software, interfacing, parts or supplies not supplied by HP, (c) unauthorized modification or misuse, (d) operation outside of the published environmental specifications for the product, or (e) improper site preparation or maintenance.

TO THE EXTENT ALLOWED BY LOCAL LAW, THE ABOVE WARRANTIES ARE EXCLUSIVE AND NO OTHER WARRANTY OR CONDITION, WHETHER WRITTEN OR ORAL, IS EXPRESSED OR IMPLIED AND HP SPECIFICALLY DISCLAIMS ANY IMPLIED WARRANTIES OR CONDITIONS OF MERCHANTABILITY, SATISFACTORY QUALITY, AND FITNESS FOR A PARTICULAR PURPOSE. Some countries/regions, states or provinces do not allow limitations on the duration of an implied warranty, so the above limitation or exclusion might not apply to you. This warranty gives you specific legal rights and you might also have other rights that vary from country/region to country/region, state to state, or province to province. HP's limited warranty is valid in any country/region or locality where HP has a support presence for this product and where HP has marketed this product. The level of warranty service you receive may vary according to local standards. HP will not alter form, fit or function of the product to make it operate in a country/region for which it was never intended to function for legal or regulatory reasons.

TO THE EXTENT ALLOWED BY LOCAL LAW, THE REMEDIES IN THIS WARRANTY STATEMENT ARE YOUR SOLE AND EXCLUSIVE REMEDIES. EXCEPT AS INDICATED ABOVE, IN NO EVENT WILL HP OR ITS SUPPLIERS BE LIABLE FOR LOSS OF DATA OR FOR DIRECT, SPECIAL, INCIDENTAL, CONSEQUENTIAL

(INCLUDING LOST PROFIT OR DATA), OR OTHER DAMAGE, WHETHER BASED IN CONTRACT, TORT, OR OTHERWISE. Some countries/regions, states or provinces do not allow the exclusion or limitation of incidental or consequential damages, so the above limitation or exclusion may not apply to you.

THE WARRANTY TERMS CONTAINED IN THIS STATEMENT, EXCEPT TO THE EXTENT LAWFULLY PERMITTED, DO NOT EXCLUDE, RESTRICT OR MODIFY AND ARE IN ADDITION TO THE MANDATORY STATUTORY RIGHTS APPLICABLE TO THE SALE OF THIS PRODUCT TO YOU.

Customer self repair warranty service

HP products are designed with many Customer Self Repair (CSR) parts to minimize repair time and allow for greater flexibility in performing defective parts replacement. If during the diagnosis period, HP identifies that the repair can be accomplished by the use of a CSR part, HP will ship that part directly to you for replacement. There are two categories of CSR parts: 1) Parts for which customer self repair is mandatory. If you request HP to replace these parts, you will be charged for the travel and labor costs of this service. 2) Parts for which customer self repair is optional. These parts are also designed for Customer Self Repair. If, however, you require that HP replace them for you, this may be done at no additional charge under the type of warranty service designated for your product.

Based on availability and where geography permits, CSR parts will be shipped for next business day delivery. Same-day or four-hour delivery may be offered at an additional charge where geography permits. If assistance is required, you can call the HP Technical Support Center and a technician will help you over the phone. HP specifies in the materials shipped with a replacement CSR part whether a defective part must be returned to HP. In cases where it is required to return the defective part to HP, you must ship the defective part back to HP within a defined period of time, normally five (5) business days. The defective part must be returned with the associated documentation in the provided shipping material. Failure to return the defective part may result in HP billing you for the replacement. With a customer self repair, HP will pay all shipping and part return costs and determine the courier/carrier to be used.

Print cartridge limited warranty statement

This HP product is warranted to be free from defects in materials and workmanship.

This warranty does not apply to products that (a) have been refilled, refurbished, remanufactured or tampered with in any way, (b) experience problems resulting from misuse, improper storage, or operation outside of the published environmental specifications for the printer product or (c) exhibit wear from ordinary use.

To obtain warranty service, please return the product to place of purchase (with a written description of the problem and print samples) or contact HP customer support. At HP's option, HP will either replace products that prove to be defective or refund your purchase price.

TO THE EXTENT ALLOWED BY LOCAL LAW, THE ABOVE WARRANTY IS EXCLUSIVE AND NO OTHER WARRANTY OR CONDITION, WHETHER WRITTEN OR ORAL, IS EXPRESSED OR IMPLIED AND HP SPECIFICALLY DISCLAIMS ANY IMPLIED WARRANTIES OR CONDITIONS OF MERCHANTABILITY, SATISFACTORY QUALITY, AND FITNESS FOR A PARTICULAR PURPOSE.

TO THE EXTENT ALLOWED BY LOCAL LAW, IN NO EVENT WILL HP OR ITS SUPPLIERS BE LIABLE FOR DIRECT, SPECIAL, INCIDENTAL, CONSEQUENTIAL (INCLUDING LOST PROFIT OR DATA), OR OTHER DAMAGE, WHETHER BASED IN CONTRACT, TORT, OR OTHERWISE.

THE WARRANTY TERMS CONTAINED IN THIS STATEMENT, EXCEPT TO THE EXTENT LAWFULLY PERMITTED, DO NOT EXCLUDE, RESTRICT OR MODIFY AND ARE IN ADDITION TO THE MANDATORY STATUTORY RIGHTS APPLICABLE TO THE SALE OF THIS PRODUCT TO YOU.

Customer support

Get telephone support, free during your warranty period, for your country/region Have the product name, serial number, date of purchase, and problem description ready.	Country/region phone numbers are on the flyer that was in the box with your product or at www.hp.com/support/.
Get 24-hour Internet support	www.hp.com/support/CM2320series
Get support for products used with a Macintosh computer	www.hp.com/go/macosx
Download software utilities, drivers, and electronic information	www.hp.com/go/LJCM2320_software
Order supplies and paper	www.hp.com/go/suresupply
Order genuine HP parts or accessories	www.hp.com/buy/parts
Order additional HP service or maintenance agreements	www.hp.com/go/carepack

B Specifications

This section contains the following information about the product:

Physical specifications

Table B-1 Physical specifications

Product	Height	Depth	Width	Weight
HP Color LaserJet CM2320	532 mm (21.0 inches)	492 mm (19.4 inches)	497 mm (19.6 inches)	29.4 kg (64.8 lb)
HP Color LaserJet CM2320 MFP Fax Model	532 mm (21.0 inches)	492 mm (19.4 inches)	497 mm (19.6 inches)	31.1 kg (68.5 lb)
HP Color LaserJet CM2320 MFP Memory-Card Model	532 mm (21.0 inches)	492 mm (19.4 inches)	497 mm (19.6 inches)	31.1 kg (68.5 lb)

Electrical specifications

△ **CAUTION:** Power requirements are based on the country/region where the product is sold. Do not convert operating voltages. This will damage the product and void the product warranty.

Table B-2 Electrical specifications

Item	110-volt models	230-volt models
Power requirements	100 to 127 VAC (+/- 10%) 60 Hz (+/- 3 Hz)	220 to 240 VAC (+/- 10%) 50 Hz (+/- 3 Hz)
Rated current	6.0 A	3.0 A

Environmental specifications

Table B-3 Environmental specifications[1]

	Recommended	Operating	Storage
Temperature	15° to 32.5° C (59° to 90.5° F)	15° to 32.5° C (59° to 90.5° F)	–20° to 40° C (–4° to 104° F)
Relative humidity	20 to 70%	15 to 80%	85% or less

[1] Values are subject to change.

Power consumption and acoustic emissions (HP Color LaserJet CM2320, HP Color LaserJet CM2320 MFP Fax Model, HP Color LaserJet CM2320 MFP Memory-Card Model)

See www.hp.com/go/cljcm2320mfp/regulatory for current information.

Paper and print media specifications

For information about the supported paper and print media, see Paper and print media on page 37.

Skew specifications

Table B-4 Media registration and image placement accuracy

	Cut sheet simplex and automatic duplex[1]	Envelopes and postcards
Skew - vertical	≤ 1.5 mm / 260 mm	≤ 3.0 mm / 220 mm
First line / leading edge position	5.0 mm ± 2.0 mm	10.0 mm ± 3.5 mm
Left margin accuracy	5.0 mm ± 2.0 mm	10 mm ± 2.5 mm
Parallelism	≤ 1.5 mm	N/A
Image or text stretching - vertical	≤ 1.0 %	N/A
Image or text stretching - horizontal	≤ 1.0 %	N/A
Duplex registration - vertical, horizontal	≤ 2.0 mm	N/A

[1] Xerox 4024 (#20) should be used for measurement.

C Regulatory information

This section contains the following regulatory information:

- FCC regulations
- Additional statements for telecom (fax) products
- Declaration of conformity
- Certificate of volatility
- Country/region specific statements

FCC regulations

This equipment has been tested and found to comply with the limits for a Class B digital device, pursuant to Part 15 of the FCC rules. These limits are designed to provide reasonable protection against harmful interference in a residential installation. This equipment generates, uses, and can radiate radio frequency energy. If this equipment is not installed and used in accordance with the instructions, it may cause harmful interference to radio communications. However, there is no guarantee that interference will not occur in a particular installation. If this equipment does cause harmful interference to radio or television reception, which can be determined by turning the equipment off and on, the user is encouraged to try to correct the interference by one or more of the following measures:

- Reorient or relocate the receiving antenna.
- Increase separation between equipment and receiver.
- Connect equipment to an outlet on a circuit different from that to which the receiver is located.
- Consult your dealer or an experienced radio/TV technician.

NOTE: Any changes or modifications to the printer that are not expressly approved by HP could void the user's authority to operate this equipment.

Use of a shielded interface cable is required to comply with the Class B limits of Part 15 of FCC rules.

Additional statements for telecom (fax) products

EU statement for telecom operation

This product is intended to be connected to the analog Public Switched Telecommunication Networks (PSTN) of European Economic Area (EEA) countries/regions. It meets requirements of EU R&TTE Directive 1999/5/EC (Annex II) and carries appropriate CE conformity marking. For more details, see Declaration of Conformity issued by the manufacturer in another section of this manual. However, due to differences between individual national PSTNs, the product may not guarantee unconditional assurance of successful operation on every PSTN termination point. Network compatibility depends on the correct setting being selected by the customer in preparation of its connection to the PSTN. Please follow the instructions provided in the user manual. If you experience network compatibility issues, please contact your equipment supplier or Hewlett-Packard help desk in the country/region of operation. Connecting to a PSTN termination point may be the subject of additional requirements set out by the local PSTN operator.

New Zealand telecom statements

The grant of a Telepermit for any item of terminal equipment indicates only that Telecom has accepted that the item complies with minimum conditions for connection to its network. It indicates no endorsement of the product by Telecom, nor does it provide any sort of warranty. Above all, it provides no assurance that any item will work correctly in all respects with another item of Telepermitted equipment of a different make or model, nor does it imply that any product is compatible with all of Telecom's network services.

This equipment may not provide for the effective hand-over of a call to another device connected to the same line.

This equipment shall not be set up to make automatic calls to the Telecom "111" Emergency Service.

This product has not been tested to ensure compatibility with the FaxAbility distinctive ring service for New Zealand.

Telephone Consumer Protection Act (United States)

The Telephone Consumer Protection Act of 1991 makes it unlawful for any person to use a computer or other electronic device, including fax machines, to send any message unless such message clearly contains, in a margin at the top or bottom of each transmitted page or on the first page of the transmission, the date and time it is sent and an identification of the business, other entity, or individual sending the message and the telephone number of the sending machine or such business, other entity, or individual. (The telephone number provided cannot be a 900 number or any other number for which charges exceed local or long-distance transmission charges.)

IC CS-03 requirements

Notice: The Industry Canada label identifies certified equipment. This certification means the equipment meets certain telecommunications network protective, operational, and safety requirements as prescribed in the appropriate Terminal Equipment Technical Requirement document(s). The Department does not guarantee the equipment will operate to the user's satisfaction. Before installing this equipment, users should ensure that it is permissible for the equipment to be connected to the facilities of the local telecommunications company. The equipment must also be installed using an acceptable method of connection. The customer should be aware that compliance with the above conditions may not prevent degradation of service in some situations. Repairs to certified equipment should be coordinated by a representative designated by the supplier. Any repairs or alterations made by the user to this equipment, or equipment malfunctions, may give the telecommunications company cause to request the user to disconnect the equipment. Users should ensure for their own protection that the electrical ground connections of the power utility, telephone lines, and internal metallic water pipe system, if present, are connected together. This precaution can be particularly important in rural areas.

△ **CAUTION:** Users should not attempt to make such connections themselves, but should contact the appropriate electric inspection authority, or electrician, as appropriate. The Ringer Equivalence Number (REN) of this device is 0.0.

Notice: The Ringer Equivalence Number (REN) assigned to each terminal device provides an indication of the maximum number of terminals allowed to be connected to a telephone interface. The termination on an interface may consist of any combination of devices subject only to the requirement that the sum of the Ringer Equivalence Number of all the devices does not exceed five (5.0). The standard connecting arrangement code (telephone jack type) for equipment with direct connections to the telephone network is CA11A.

Declaration of conformity

HP Color LaserJet CM2320 MFP

Declaration of Conformity
according to ISO/IEC 17050-1 and EN 17050-1

Manufacturer's Name:	Hewlett-Packard Company	DoC#: BOISB-0701-01-rel.1.0
Manufacturer's Address:	11311 Chinden Boulevard, Boise, Idaho 83714-1021, USA	

declares, that the product

Product Name:	HP Color LaserJet CM2320 MFP
Regulatory Model Number[2)]	BOISB-0701-01
Product Options:	ALL
Print Cartridges:	CC530A, CC531A, CC532A, CC533A

conforms to the following Product Specifications:

SAFETY:	IEC 60950-1:2001 / EN60950-1: 2001 +A11 IEC 60825-1:1993 +A1 +A2 / EN 60825-1:1994 +A1 +A2 (Class 1 Laser/LED Product) GB4943-2001
EMC:	CISPR22:2005 / EN55022:2006 – Class B[1)] EN 61000-3-2:2000 +A2 EN 61000-3-3:1995 +A1 EN 55024:1998 +A1 +A2 FCC Title 47 CFR, Part 15 Class B / ICES-003, Issue 4 GB9254-1998, GB17625.1-2003

Supplementary Information:

The product herewith complies with the requirements of the EMC Directive 2004/108/EC and the Low Voltage Directive 2006/95/EC and carries the CE-Marking CE accordingly.

This Device complies with Part 15 of the FCC Rules. Operation is subject to the following two Conditions: (1) this device may not cause harmful interference, and (2) this device must accept any interference received, including interference that may cause undesired operation.

1) The product was tested in a typical configuration with Hewlett-Packard Personal Computer Systems.

2) For regulatory purposes, this product is assigned a Regulatory model number. This number should not be confused with the product name or the product number(s).

Boise, Idaho , USA

January 2008

For regulatory topics only:

European Contact:	Your Local Hewlett-Packard Sales and Service Office or Hewlett-Packard GmbH, Department HQ-TRE / Standards Europe,, Herrenberger Strasse 140, D-71034 Böblingen, Germany, (FAX: +49-7031-14-3143), www.hp.com/go/certificates
USA Contact:	Product Regulations Manager, Hewlett-Packard Company,, PO Box 15, Mail Stop 160, Boise, Idaho 83707-0015, , (Phone: 208-396-6000)

HP LaserJet CM2320 Fax Model / CM2320 Memory-Card Model

Declaration of Conformity
according to ISO/IEC 17050-1 and EN 17050-1

Manufacturer's Name:	Hewlett-Packard Company	DoC#: BOISB-0701-02-rel.1.0
Manufacturer's Address:	11311 Chinden Boulevard, Boise, Idaho 83714-1021, USA	

declares, that the product

Product Name:	HP Color LaserJet CM2320nf MFP HP Color LaserJet CM2320fxi MFP
Accessories[4)]	BOISB-0704-00 (US-Fax Module LIU) BOISB-0704-01 (EURO-Fax Module LIU)

Declaration of Conformity

according to ISO/IEC 17050-1 and EN 17050-1

Regulatory Model Number[2)]	BOISB-0701-02
Product Options:	ALL
Print Cartridges:	CC530A, CC531A, CC532A, CC533A

conforms to the following Product Specifications:

SAFETY:	IEC 60950-1:2001 / EN60950-1: 2001 +A11 IEC 60825-1:1993 +A1 +A2 / EN 60825-1:1994 +A1 +A2 (Class 1 Laser/LED Product) GB4943-2001
EMC:	CISPR22:2005 / EN55022:2006 – Class B[1)] EN 61000-3-2:2000 +A2 EN 61000-3-3:1995 +A1 EN 55024:1998 +A1 +A2 FCC Title 47 CFR, Part 15 Class B / ICES-003, Issue 4 GB9254-1998, GB17625.1-2003
TELECOM:	ES 203 021; FCC Title 47 CFR, Part 68[3)]

Supplementary Information:

The product herewith complies with the requirements of the EMC Directive 2004/108/EC and the Low Voltage Directive 2006/95/EC, the R&TTE Directive 1999/5/EC (Annex II), and carries the CE-Marking CE accordingly.

This Device complies with Part 15 of the FCC Rules. Operation is subject to the following two Conditions: (1) this device may not cause harmful interference, and (2) this device must accept any interference received, including interference that may cause undesired operation.

1) The product was tested in a typical configuration with Hewlett-Packard Personal Computer Systems.

2) For regulatory purposes, this product is assigned a Regulatory model number. This number should not be confused with the product name or the product number(s).

3) Telecom approvals and standards appropriate for the target countries/regions have been applied to this product, in addition to those listed above.

4.) This product uses an analog fax accessory module which Regulatory Model numbers are: BOISB-0704-00 (US-LIU) or BOISB-0704-01 (EURO LIU), as needed to meet technical regulatory requirements for the countries/regions this product will be sold.

Boise, Idaho , USA

January 2008

For regulatory topics only:

European Contact:	Your Local Hewlett-Packard Sales and Service Office or Hewlett-Packard GmbH, Department HQ-TRE / Standards Europe,, Herrenberger Strasse 140, D-71034 Böblingen, Germany, (FAX: +49-7031-14-3143), www.hp.com/go/certificates
USA Contact:	Product Regulations Manager, Hewlett-Packard Company,, PO Box 15, Mail Stop 160, Boise, ID 83707-0015, , (Phone: 208-396-6000)

Certificate of volatility

This is a statement of volatility regarding customer stored data in the memory devices of the HP Color LaserJet CM2320 MFP Series Series printer.

The product uses volatile memory to store customer data during the printing process. When the product power is off, the data is erased. The product also uses non-volatile memory to store customer set product configuration information. This non-volatile memory can be erased and restored to factory default values by using the **Restore defaults** option of the **Service** menu. See Restore the factory-set defaults on page 313.

Country/region specific statements

Laser safety

The Center for Devices and Radiological Health (CDRH) of the U.S. Food and Drug Administration has implemented regulations for laser products manufactured since August 1, 1976. Compliance is mandatory for products marketed in the United States. The device is certified as a “Class 1” laser product under the U.S. Department of Health and Human Services (DHHS) Radiation Performance Standard according to the Radiation Control for Health and Safety Act of 1968. Since radiation emitted inside the device is completely confined within protective housings and external covers, the laser beam cannot escape during any phase of normal user operation.

⚠ **WARNING!** Using controls, making adjustments, or performing procedures other than those specified in this user guide may result in exposure to hazardous radiation.

Canadian DOC regulations

Complies with Canadian EMC Class B requirements.

« Conforme à la classe B des normes canadiennes de compatibilité électromagnétiques. « CEM ». »

VCCI statement (Japan)

この装置は、情報処理装置等電波障害自主規制協議会（ＶＣＣＩ）の基準に基づくクラスＢ情報技術装置です。この装置は、家庭環境で使用することを目的としていますが、この装置がラジオやテレビジョン受信機に近接して使用されると、受信障害を引き起こすことがあります。
取扱説明書に従って正しい取り扱いをして下さい。

EMI statement (Korea)

B급 기기 (가정용 정보통신기기)

이 기기는 가정용으로 전자파적합등록을 한 기기로서 주거지역에서는 물론 모든지역에서 사용할 수 있습니다.

Laser statement for Finland

Luokan 1 laserlaite

Klass 1 Laser Apparat

HP Color LaserJet CM2320, CM2320nf, CM2320fxi, laserkirjoitin on käyttäjän kannalta turvallinen luokan 1 laserlaite. Normaalissa käytössä kirjoittimen suojakotelointi estää lasersäteen pääsyn laitteen ulkopuolelle. Laitteen turvallisuusluokka on määritetty standardin EN 60825-1 (1994) mukaisesti.

VAROITUS !

Laitteen käyttäminen muulla kuin käyttöohjeessa mainitulla tavalla saattaa altistaa käyttäjän turvallisuusluokan 1 ylittävälle näkymättömälle lasersäteilylle.

VARNING !

Om apparaten används på annat sätt än i bruksanvisning specificerats, kan användaren utsättas för osynlig laserstrålning, som överskrider gränsen för laserklass 1.

HUOLTO

HP Color LaserJet CM2320, CM2320nf, CM2320fxi - kirjoittimen sisällä ei ole käyttäjän huollettavissa olevia kohteita. Laitteen saa avata ja huoltaa ainoastaan sen huoltamiseen koulutettu henkilö. Tällaiseksi huoltotoimenpiteeksi ei katsota väriainekasetin vaihtamista, paperiradan puhdistusta tai muita käyttäjän käsikirjassa lueteltuja, käyttäjän tehtäväksi tarkoitettuja ylläpitotoimia, jotka voidaan suorittaa ilman erikoistyökaluja.

VARO !

Mikäli kirjoittimen suojakotelo avataan, olet alttiina näkymättömällelasersäteilylle laitteen ollessa toiminnassa. Älä katso säteeseen.

VARNING !

Om laserprinterns skyddshölje öppnas då apparaten är i funktion, utsättas användaren för osynlig laserstrålning. Betrakta ej strålen. Tiedot laitteessa käytettävän laserdiodin säteilyominaisuuksista: Aallonpituus 775-795 nm Teho 5 m W Luokan 3B laser.

Substances table (China)

有毒有害物质表

根据中国电子信息产品污染控制管理办法的要求而出台

部件名称	有毒有害物质和元素					
	铅 (Pb)	汞 (Hg)	镉 (Cd)	六价铬 (Cr(VI))	多溴联苯 (PBB)	多溴二苯醚 (PBDE)
打印引擎	X	0	X	X	0	0
复印机组件	X	0	0	0	0	0
控制面板	0	0	0	0	0	0
塑料外壳	0	0	0	0	0	0
格式化板组件	X	0	0	0	0	0
碳粉盒	X	0	0	0	0	0

3048

0：表示在此部件所用的所有同类材料中，所含的此有毒或有害物质均低于 SJ/T11363-2006 的限制要求。
X：表示在此部件所用的所有同类材料中，至少一种所含的此有毒或有害物质高于 SJ/T11363-2006 的限制要求。

注：引用的“环保使用期限”是根据在正常温度和湿度条件下操作使用产品而确定的。

Index

D

E

F

G

H

I

Q

R

S

T

U

V

W

www.hp.com

CC434-90969